SLOS063A – JUNE 1976 – REVISED APRIL 1994

- **Small-Signal Bandwidth . . . 15 MHz Typ**
- **Slew Rate . . . 50 V/µs Min**
- **Bias Current . . . 250 nA Max (LM118, LM218)**
- **Supply Voltage Range . . . ±5 V to ±20 V**
- **Internal Frequency Compensation**
- **Input and Output Overload Protection**
- **Same Pin Assignments as General-Purpose Operational Amplifiers**

D, JG, OR P PACKAGE
(TOP VIEW)

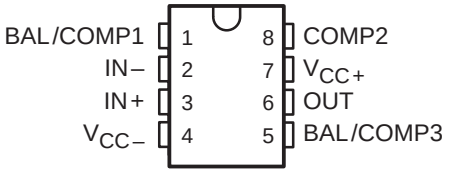

FK PACKAGE
(TOP VIEW)

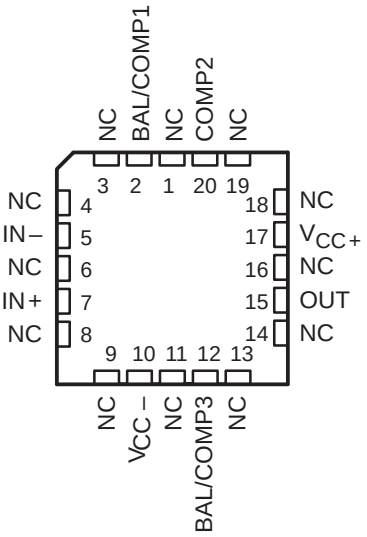

NC – No internal connection

description

The LM118, LM218, and LM318 are precision, fast operational amplifiers designed for applications requiring wide bandwidth and high slew rate. They feature a factor-of-ten increase in speed over general-purpose devices without sacrificing dc performance.

These operational amplifiers have internal unity-gain frequency compensation. This considerably simplifies their application, since no external components are necessary for operation. However, unlike most internally compensated amplifiers, external frequency compensation may be added for optimum performance. For inverting applications, feed-forward compensation boosts the slew rate to over 150 V/µs and almost double the bandwidth. Overcompensation can be used with the amplifier for greater stability when maximum bandwidth is not needed. Further, a single capacitor may be added to reduce the settling time for 0.1% error band to under 1 µs.

The high speed and fast settling time of these operational amplifiers make them useful in A/D converters, oscillators, active filters, sample-and-hold circuits, and general-purpose amplifiers.

The LM118 is characterized for operation from –55°C to 125°C. The LM218 is characterized for operation from –25°C to 85°C, and the LM318 is characterized for operation from 0°C to 70°C.

symbol

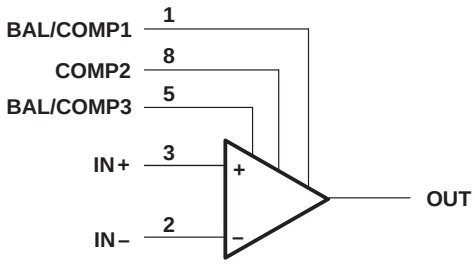

Pin numbers shown are for the D, JG, and P packages.

PRODUCTION DATA information is current as of publication date. Products conform to specifications per the terms of Texas Instruments standard warranty. Production processing does not necessarily include testing of all parameters.

Copyright © 1994, Texas Instruments Incorporated

On products compliant to MIL-PRF-38535, all parameters are tested unless otherwise noted. On all other products, production processing does not necessarily include testing of all parameters.

AVAILABLE OPTIONS

T_A	V_{IO}max AT 25°C	PACKAGE			
		SMALL OUTLINE (D)	CHIP CARRIER (FK)	CERAMIC DIP (JG)	PLASTIC DIP (P)
0°C to 70°C	10 mV	LM318D	—	—	LM318P
–25°C to 85°C	4 mV	LM218D	—	—	LM218P
–55°C to 125°C	4 mV	LM118D	LM118FK	LM118JG	LM118P

The D package is available taped and reeled. Add the suffix R to the device type (e.g., LM318DR).

schematic

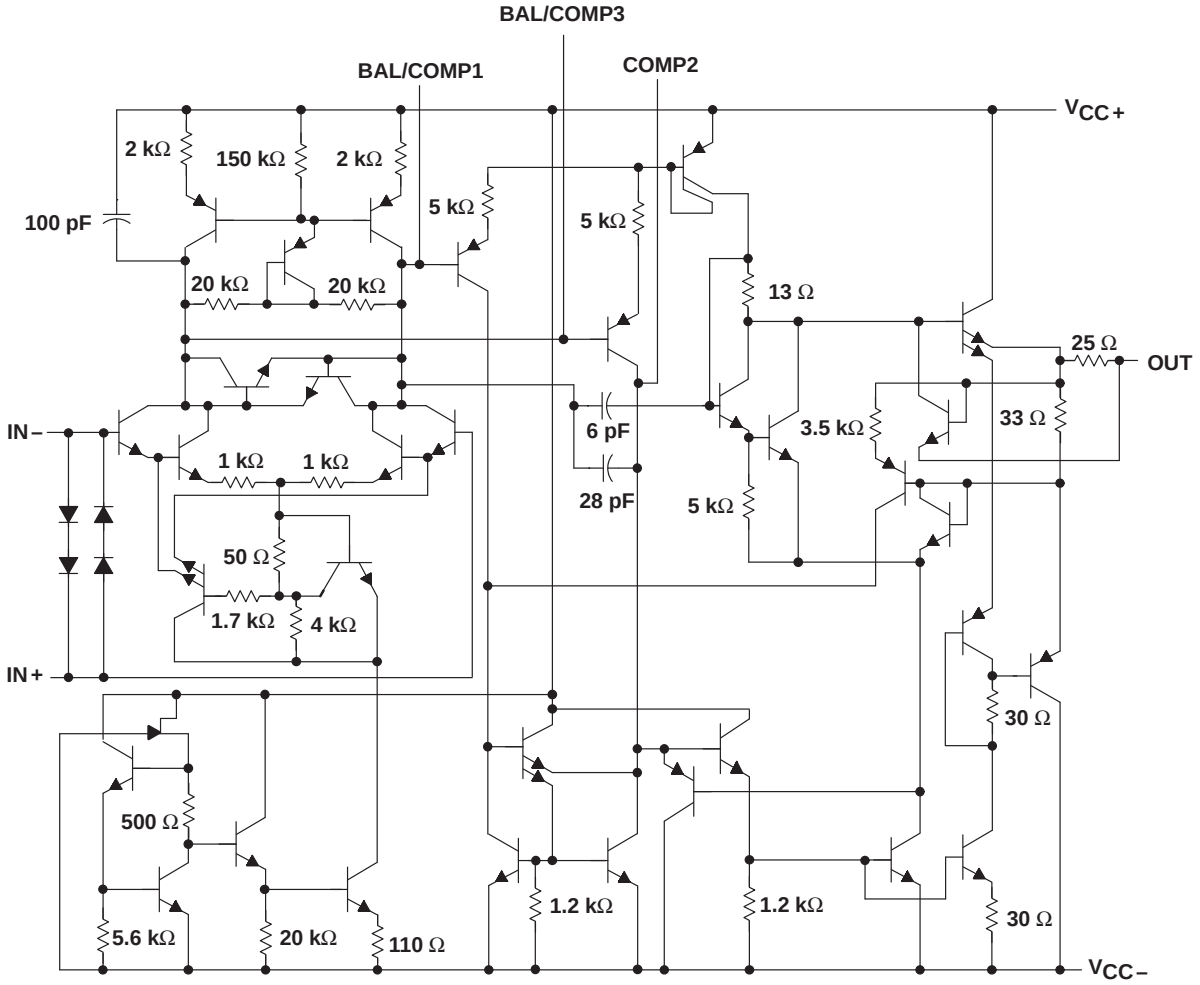

Component values shown are nominal.

absolute maximum ratings over operating free-air temperature range (unless otherwise noted)

		LM118	LM218	LM318	UNIT
Supply voltage, V_{CC+} (see Note 1)		20	20	20	V
Supply voltage, V_{CC-} (see Note 1)		–20	–20	–20	V
Input voltage, V_I (either input, see Notes 1 and 2)		±15	±15	±15	V
Differential input current, V_{ID} (see Note 3)		±10	±10	±10	mA
Duration of output short circuit (see Note 4)		unlimited	unlimited	unlimited	
Continuous total power dissipation		See Dissipation Rating Table			
Operating free-air temperature range, T_A		–55 to 125	–25 to 85	0 to 70	°C
Storage temperature range		–65 to 150	–65 to 150	–65 to 50	°C
Case temperature for 60 seconds	FK package	260			°C
Lead temperature 1,6 mm (1/16 inch) from case for 10 seconds	D or P package	260	260	260	°C
Lead temperature 1,6 mm (1/16 inch) from case for 60 seconds	JG package	300			°C

NOTES:
1. All voltage values, unless otherwise noted, are with respect to the midpoint between V_{CC+} and V_{CC-}.
2. The magnitude of the input voltage must never exceed the magnitude of the supply voltage or 15 V, whichever is less.
3. The inputs are shunted with two opposite-facing base-emitter diodes for overvoltage protection. Therefore, excessive current flows if a different input voltage in excess of approximately 1 V is applied between the inputs unless some limiting resistance is used.
4. The output can be shorted to ground or either power supply. For the LM118 and LM218 only, the unlimited duration of the short circuit applies at (or below) 85°C case temperature or 75°C free-air temperature.

DISSIPATION RATING TABLE

PACKAGE	$T_A \leq 25°C$ POWER RATING	DERATING FACTOR	DERATE ABOVE T_A	$T_A = 70°C$ POWER RATING	$T_A = 85°C$ POWER RATING	$T_A = 125°C$ POWER RATING
D	500 mV	5.8 mW/°C	64°C	464 mW	377 mW	145 mW
FK	500 mV	11.0 mW/°C	105°C	500 mW	500 mW	275 mW
JG	500 mV	8.4 mW/°C	90°C	500 mW	500 mW	210 mW
P	500 mV	8.0 mW/°C	88°C	500 mW	500 mW	200 mW

electrical characteristics at specified free-air temperature (see Note 5)

PARAMETER		TEST CONDITIONS†	T_A‡	LM118, LM218			LM318			UNIT
				MIN	TYP	MAX	MIN	TYP	MAX	
V_{IO}	Input offset voltage	$V_O = 0$	25°C		2	4		4	10	mV
			Full range			6			15	
I_{IO}	Input offset current	$V_O = 0$	25°C		6	50		30	200	nA
			Full range			100			300	
I_{IB}	Input bias current	$V_O = 0$	25°C		120	250		150	500	nA
			Full range			500			750	
V_{ICR}	Common-mode input voltage range	$V_{CC\pm} = \pm 15$ V	Full range	±11.5			±11.5			V
V_{OM}	Maximum peak output voltage swing	$V_{CC\pm} = \pm 15$ V, $R_L = 2$ kΩ	Full range	±12	±13		±12	±13		V
A_{VD}	Large-signal differential voltage amplification	$V_{CC\pm} = \pm 15$ V, $V_O = \pm 10$ V, $R_L \geq 2$ kΩ	25°C	50	200		25	200		V/mV
			Full range	25			20			
B_1	Unity-gain bandwidth	$V_{CC\pm} = \pm 15$ V	25°C		15			15		MHz
r_i	Input resistance		25°C	1*	3		0.5	3		MΩ
CMRR	Common-mode rejection ratio	$V_{IC} = V_{ICR}$min	Full range	80	100		70	100		dB
k_{SVR}	Supply-voltage rejection ratio ($\Delta V_{CC}/\Delta V_{IO}$)		Full range	70	80		65	80		dB
I_{CC}	Supply current	$V_O = 0$, No load	25°C		5	8		5	10	mA

* On products compliant to MIL-STD-883, Class B, this parameter is not production tested.
† All characteristics are measured under open-loop conditions with common-mode input voltage unless otherwise specified.
‡ Full range for LM118 is –55°C to 125°C, full range for LM218 is –25°C to 85°C, and full range for LM318 is 0°C to 70°C.
NOTE 5: Unless otherwise noted, $V_{CC} = \pm 5$ V to ±20 V. All typical values are at $V_{CC\pm} = \pm 15$ V and $T_A = 25$°C.

operating characteristics, $V_{CC\pm} = \pm 15$ V, $T_A = 25$°C

PARAMETER		TEST CONDITIONS	MIN	TYP	MAX	UNIT
SR	Slew rate at unity gain	$\Delta V_I = 10$ V, $C_L = 100$ pF, See Figure 1	50*	70		V/µs

* On products compliant to MIL-STD-883, Class B, this parameter is not production tested.

PARAMETER MEASUREMENT INFORMATION

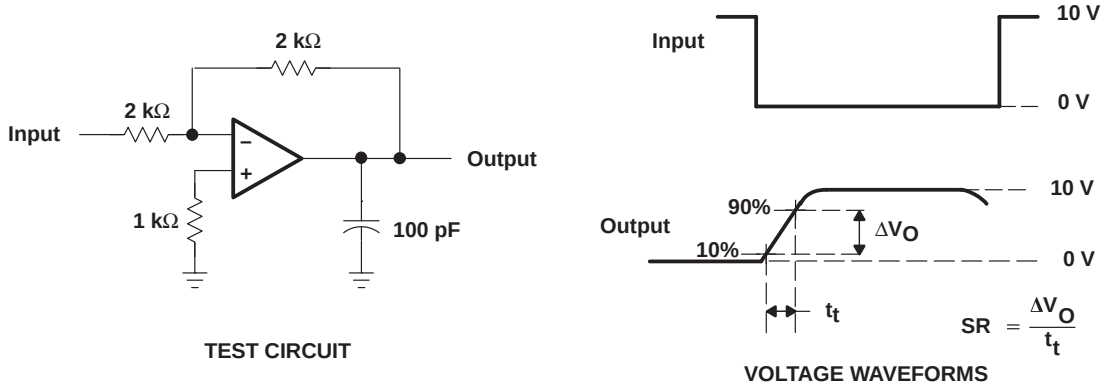

Figure 1. Slew Rate

IMPORTANT NOTICE

Texas Instruments and its subsidiaries (TI) reserve the right to make changes to their products or to discontinue any product or service without notice, and advise customers to obtain the latest version of relevant information to verify, before placing orders, that information being relied on is current and complete. All products are sold subject to the terms and conditions of sale supplied at the time of order acknowledgement, including those pertaining to warranty, patent infringement, and limitation of liability.

TI warrants performance of its semiconductor products to the specifications applicable at the time of sale in accordance with TI's standard warranty. Testing and other quality control techniques are utilized to the extent TI deems necessary to support this warranty. Specific testing of all parameters of each device is not necessarily performed, except those mandated by government requirements.

CERTAIN APPLICATIONS USING SEMICONDUCTOR PRODUCTS MAY INVOLVE POTENTIAL RISKS OF DEATH, PERSONAL INJURY, OR SEVERE PROPERTY OR ENVIRONMENTAL DAMAGE ("CRITICAL APPLICATIONS"). TI SEMICONDUCTOR PRODUCTS ARE NOT DESIGNED, AUTHORIZED, OR WARRANTED TO BE SUITABLE FOR USE IN LIFE-SUPPORT DEVICES OR SYSTEMS OR OTHER CRITICAL APPLICATIONS. INCLUSION OF TI PRODUCTS IN SUCH APPLICATIONS IS UNDERSTOOD TO BE FULLY AT THE CUSTOMER'S RISK.

In order to minimize risks associated with the customer's applications, adequate design and operating safeguards must be provided by the customer to minimize inherent or procedural hazards.

TI assumes no liability for applications assistance or customer product design. TI does not warrant or represent that any license, either express or implied, is granted under any patent right, copyright, mask work right, or other intellectual property right of TI covering or relating to any combination, machine, or process in which such semiconductor products or services might be or are used. TI's publication of information regarding any third party's products or services does not constitute TI's approval, warranty or endorsement thereof.

Copyright © 1998, Texas Instruments Incorporated