National Semiconductor

November 2000

LM135/LM235/LM335, LM135A/LM235A/LM335A Precision Temperature Sensors

General Description

The LM135 series are precision, easily-calibrated, integrated circuit temperature sensors. Operating as a 2-terminal zener, the LM135 has a breakdown voltage directly proportional to absolute temperature at +10 mV/˚K. With less than 1Ω dynamic impedance the device operates over a current range of 400 µA to 5 mA with virtually no change in performance. When calibrated at 25˚C the LM135 has typically less than 1˚C error over a 100˚C temperature range. Unlike other sensors the LM135 has a linear output.

Applications for the LM135 include almost any type of temperature sensing over a −55˚C to +150˚C temperature range. The low impedance and linear output make interfacing to readout or control circuitry especially easy.

The LM135 operates over a −55˚C to +150˚C temperature range while the LM235 operates over a −40˚C to +125˚C temperature range. The LM335 operates from −40˚C to +100˚C. The LM135/LM235/LM335 are available packaged in hermetic TO-46 transistor packages while the LM335 is also available in plastic TO-92 packages.

Features

- Directly calibrated in ˚Kelvin
- 1˚C initial accuracy available
- Operates from 400 µA to 5 mA
- Less than 1Ω dynamic impedance
- Easily calibrated
- Wide operating temperature range
- 200˚C overrange
- Low cost

Schematic Diagram

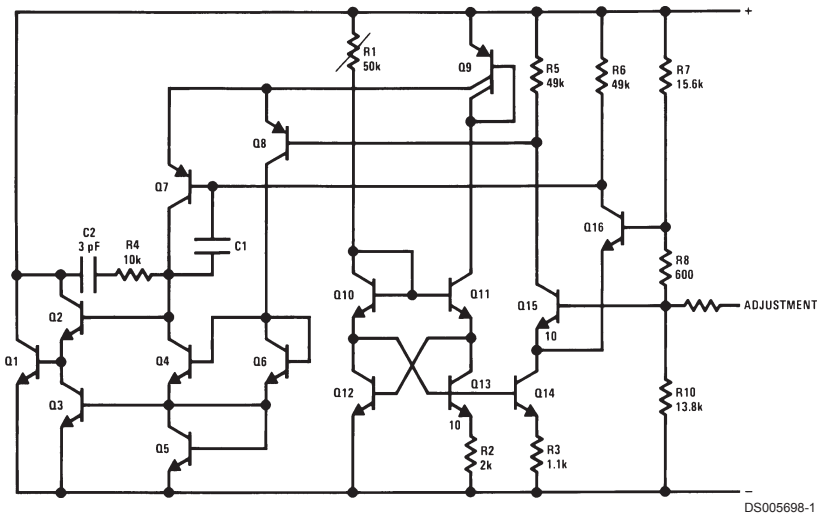

© 2000 National Semiconductor Corporation

Connection Diagrams

TO-92
Plastic Package

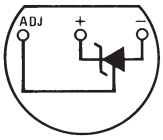

DS005698-8

Bottom View
Order Number LM335Z
or LM335AZ
See NS Package
Number Z03A

SO-8
Surface Mount Package

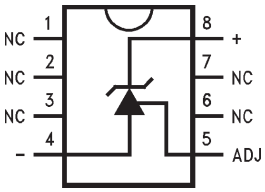

DS005698-25

Order Number LM335M
See NS Package
Number M08A

TO-46
Metal Can Package*

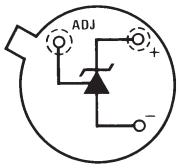

DS005698-26

*Case is connected to negative pin

Bottom View
Order Number LM135H,
LM135H-MIL, LM235H,
LM335H, LM135AH,
LM235AH or LM335AH
See NS Package
Number H03H

Absolute Maximum Ratings (Note 4)

If Military/Aerospace specified devices are required, please contact the National Semiconductor Sales Office/ Distributors for availability and specifications.

Reverse Current	15 mA
Forward Current	10 mA
Storage Temperature	
TO-46 Package	−60˚C to +180˚C
TO-92 Package	−60˚C to +150˚C
SO-8 Package	−65˚C to +150˚C

Specified Operating Temp. Range

	Continuous	Intermittent (Note 2)
LM135, LM135A	−55˚C to +150˚C	150˚C to 200˚C
LM235, LM235A	−40˚C to +125˚C	125˚C to 150˚C
LM335, LM335A	−40˚C to +100˚C	100˚C to 125˚C

Lead Temp. (Soldering, 10 seconds)	
TO-92 Package:	260˚C
TO-46 Package:	300˚C
SO-8 Package:	300˚C
Vapor Phase (60 seconds):	215˚C
Infrared (15 seconds):	220˚C

Temperature Accuracy (Note 1)

LM135/LM235, LM135A/LM235A

Parameter	Conditions	LM135A/LM235A			LM135/LM235			Units
		Min	Typ	Max	Min	Typ	Max	
Operating Output Voltage	T_C = 25˚C, I_R = 1 mA	2.97	2.98	2.99	2.95	2.98	3.01	V
Uncalibrated Temperature Error	T_C = 25˚C, I_R = 1 mA		0.5	1		1	3	˚C
Uncalibrated Temperature Error	$T_{MIN} \le T_C \le T_{MAX}$, I_R = 1 mA		1.3	2.7		2	5	˚C
Temperature Error with 25˚C Calibration	$T_{MIN} \le T_C \le T_{MAX}$, I_R = 1 mA		0.3	1		0.5	1.5	˚C
Calibrated Error at Extended Temperatures	$T_C = T_{MAX}$ (Intermittent)		2			2		˚C
Non-Linearity	I_R = 1 mA		0.3	0.5		0.3	1	˚C

Temperature Accuracy (Note 1)

LM335, LM335A

Parameter	Conditions	LM335A			LM335			Units
		Min	Typ	Max	Min	Typ	Max	
Operating Output Voltage	T_C = 25˚C, I_R = 1 mA	2.95	2.98	3.01	2.92	2.98	3.04	V
Uncalibrated Temperature Error	T_C = 25˚C, I_R = 1 mA		1	3		2	6	˚C
Uncalibrated Temperature Error	$T_{MIN} \le T_C \le T_{MAX}$, I_R = 1 mA		2	5		4	9	˚C
Temperature Error with 25˚C Calibration	$T_{MIN} \le T_C \le T_{MAX}$, I_R = 1 mA		0.5	1		1	2	˚C
Calibrated Error at Extended Temperatures	$T_C = T_{MAX}$ (Intermittent)		2			2		˚C
Non-Linearity	I_R = 1 mA		0.3	1.5		0.3	1.5	˚C

Electrical Characteristics (Note 1)

Parameter	Conditions	LM135/LM235 LM135A/LM235A			LM335 LM335A			Units
		Min	Typ	Max	Min	Typ	Max	
Operating Output Voltage Change with Current	400 μA≤I_R≤5 mA At Constant Temperature		2.5	10		3	14	mV
Dynamic Impedance	I_R=1 mA		0.5			0.6		Ω
Output Voltage Temperature Coefficient			+10			+10		mV/˚C
Time Constant	Still Air		80			80		sec
	100 ft/Min Air		10			10		sec
	Stirred Oil		1			1		sec
Time Stability	T_C=125˚C		0.2			0.2		˚C/khr

Electrical Characteristics (Note 1) (Continued)

Note 1: Accuracy measurements are made in a well-stirred oil bath. For other conditions, self heating must be considered.

Note 2: Continuous operation at these temperatures for 10,000 hours for H package and 5,000 hours for Z package may decrease life expectancy of the device.

Note 3:

Thermal Resistance	TO-92	TO-46	SO-8
θ_{JA} (junction to ambient)	202˚C/W	400˚C/W	165˚C/W
θ_{JC} (junction to case)	170˚C/W	N/A	N/A

Note 4: Refer to RETS135H for military specifications.

Typical Performance Characteristics

Reverse Voltage Change

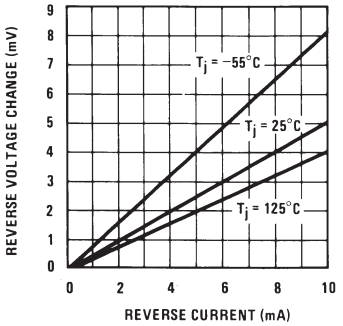

DS005698-27

Calibrated Error

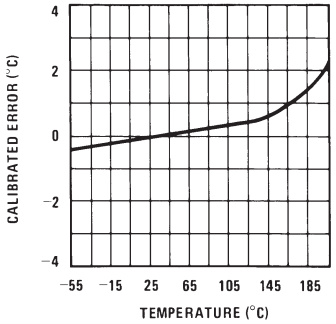

DS005698-28

Reverse Characteristics

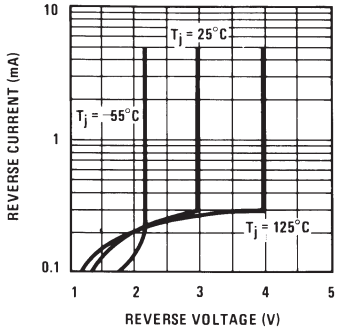

DS005698-29

Response Time

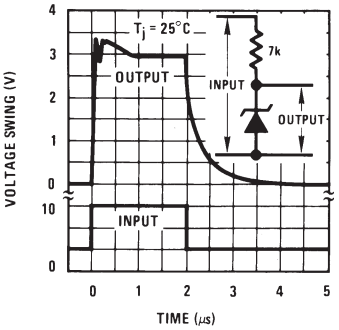

DS005698-30

Dynamic Impedance

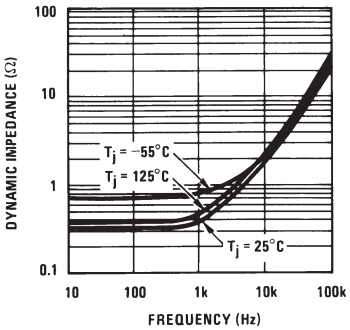

DS005698-31

Noise Voltage

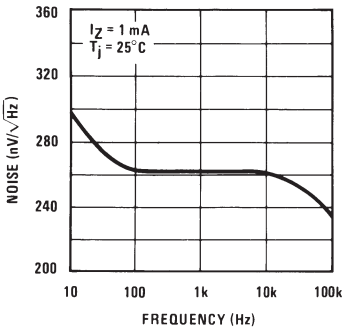

DS005698-32

Thermal Resistance Junction to Air

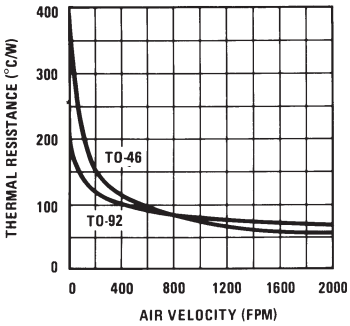

DS005698-33

Thermal Time Constant

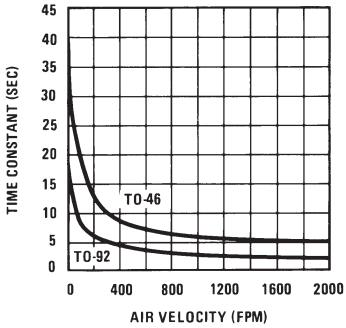

DS005698-34

Thermal Response in Still Air

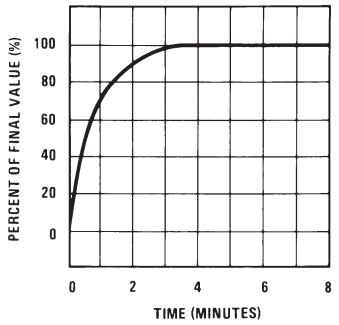

DS005698-35

Typical Performance Characteristics (Continued)

Thermal Response in Stirred Oil Bath

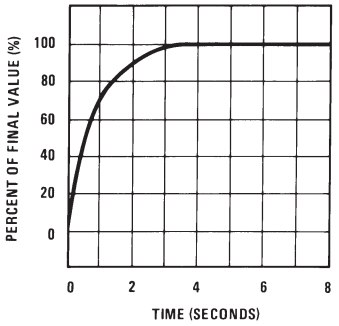

DS005698-36

Forward Characteristics

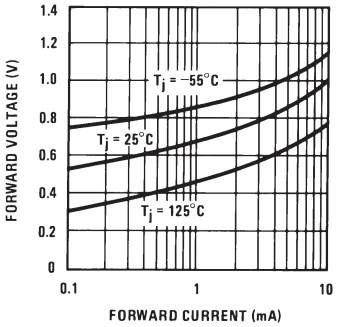

DS005698-37

Application Hints

CALIBRATING THE LM135

Included on the LM135 chip is an easy method of calibrating the device for higher accuracies. A pot connected across the LM135 with the arm tied to the adjustment terminal allows a 1-point calibration of the sensor that corrects for inaccuracy over the full temperature range.

This single point calibration works because the output of the LM135 is proportional to absolute temperature with the extrapolated output of sensor going to 0V output at 0˚K (−273.15˚C). Errors in output voltage versus temperature are only slope (or scale factor) errors so a slope calibration at one temperature corrects at all temperatures.

The output of the device (calibrated or uncalibrated) can be expressed as:

$$V_{OUT_T} = V_{OUT_{T_o}} \times \frac{T}{T_o}$$

where T is the unknown temperature and T_o is a reference temperature, both expressed in degrees Kelvin. By calibrating the output to read correctly at one temperature the output at all temperatures is correct. Nominally the output is calibrated at 10 mV/˚K.

To insure good sensing accuracy several precautions must be taken. Like any temperature sensing device, self heating can reduce accuracy. The LM135 should be operated at the lowest current suitable for the application. Sufficient current, of course, must be available to drive both the sensor and the calibration pot at the maximum operating temperature as well as any external loads.

If the sensor is used in an ambient where the thermal resistance is constant, self heating errors can be calibrated out. This is possible if the device is run with a temperature stable current. Heating will then be proportional to zener voltage and therefore temperature. This makes the self heating error proportional to absolute temperature the same as scale factor errors.

WATERPROOFING SENSORS

Meltable inner core heat shrinkable tubing such as manufactured by Raychem can be used to make low-cost waterproof sensors. The LM335 is inserted into the tubing about ½" from the end and the tubing heated above the melting point of the core. The unfilled ½" end melts and provides a seal over the device.

Typical Applications

Basic Temperature Sensor

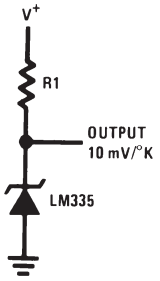

DS005698-2

Calibrated Sensor

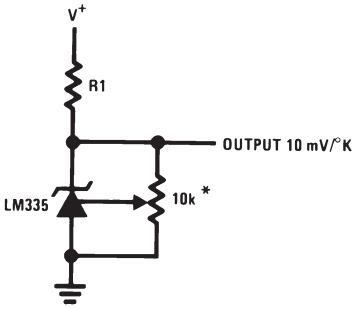

DS005698-9

*Calibrate for 2.982V at 25˚C

Wide Operating Supply

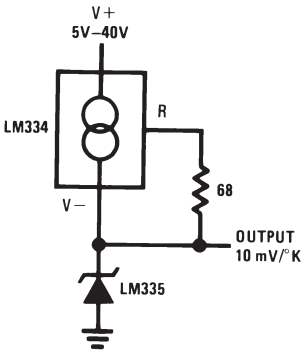

DS005698-10

Typical Applications (Continued)

Minimum Temperature Sensing

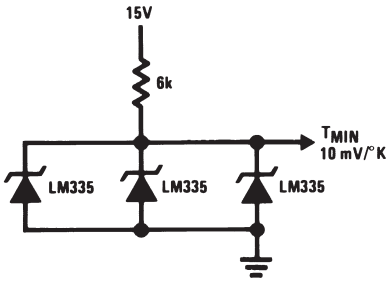

DS005698-4

Average Temperature Sensing

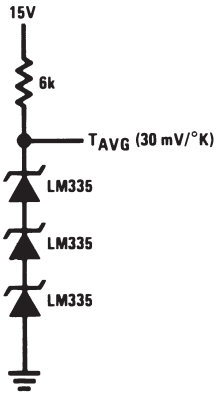

DS005698-18

Remote Temperature Sensing

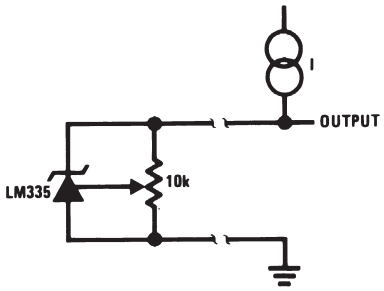

DS005698-19

Wire length for 1˚C error due to wire drop

	I_R = 1 mA	I_R = 0.5 mA*
AWG	FEET	FEET
14	4000	8000
16	2500	5000
18	1600	3200
20	1000	2000
22	625	1250
24	400	800

*For I_R = 0.5 mA, the trim pot must be deleted.

Isolated Temperature Sensor

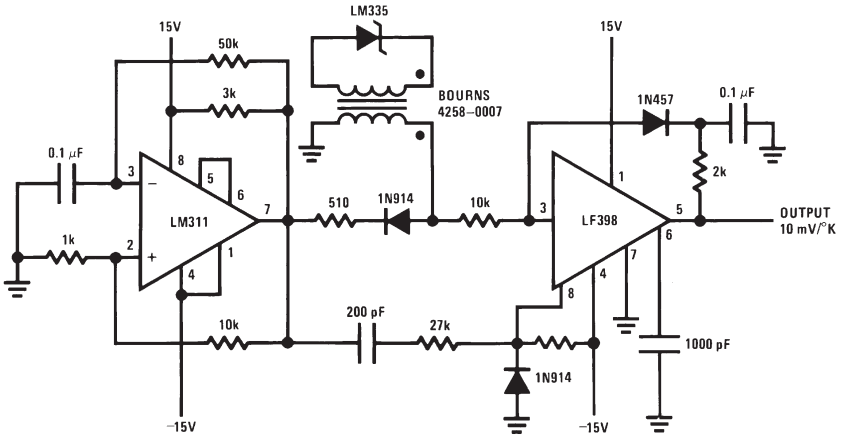

DS005698-20

Typical Applications (Continued)

Simple Temperature Controller

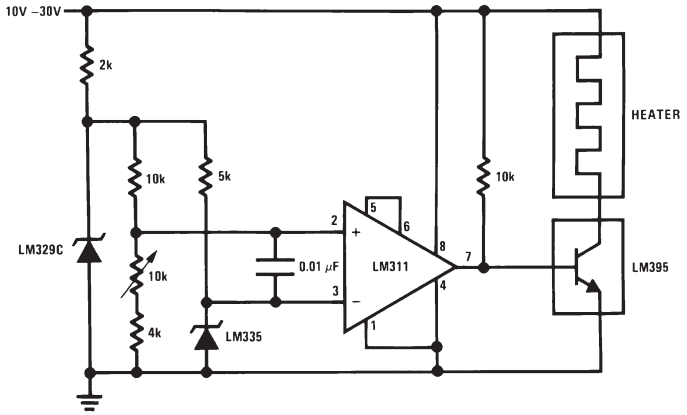

DS005698-5

Simple Temperature Control

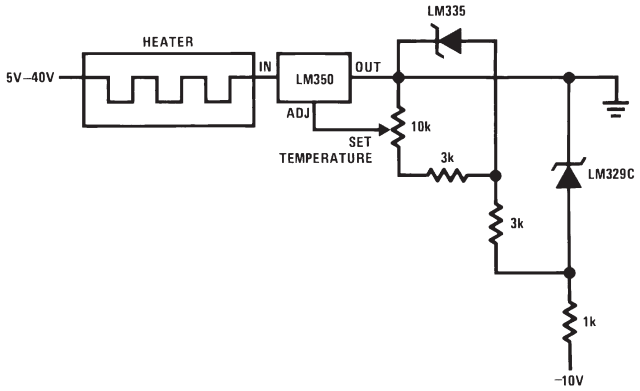

DS005698-21

Ground Referred Fahrenheit Thermometer

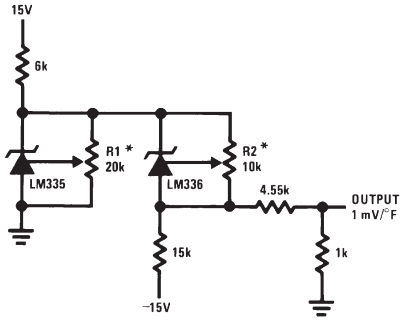

DS005698-22

*Adjust R2 for 2.554V across LM336.
Adjust R1 for correct output.

Centigrade Thermometer

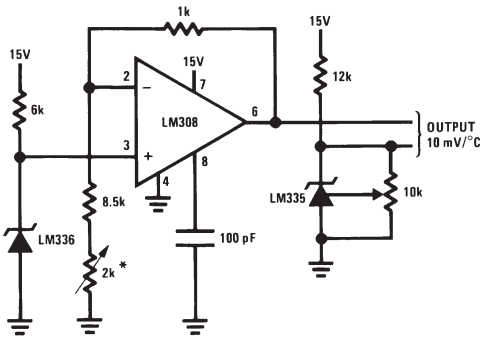

DS005698-23

*Adjust for 2.7315V at output of LM308

Typical Applications (Continued)

Fahrenheit Thermometer

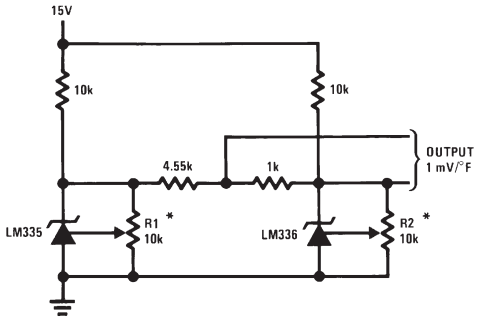

DS005698-24

*To calibrate adjust R2 for 2.554V across LM336.
Adjust R1 for correct output.

THERMOCOUPLE COLD JUNCTION COMPENSATION
Compensation for Grounded Thermocouple

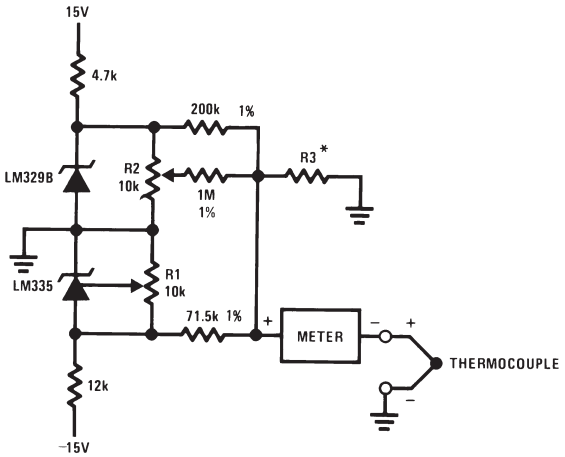

DS005698-6

*Select R3 for proper thermocouple type

THERMO-COUPLE	R3 (±1%)	SEEBECK COEFFICIENT
J	377Ω	52.3 μV/˚C
T	308Ω	42.8 μV/˚C
K	293Ω	40.8 μV/˚C
S	45.8Ω	6.4 μV/˚C

Adjustments: Compensates for both sensor and resistor tolerances
1. Short LM329B
2. Adjust R1 for Seebeck Coefficient times ambient temperature (in degrees K) across R3.
3. Short LM335 and adjust R2 for voltage across R3 corresponding to thermocouple type

J	14.32 mV	K	11.17 mV
T	11.79 mV	S	1.768 mV

Typical Applications (Continued)

Single Power Supply Cold Junction Compensation

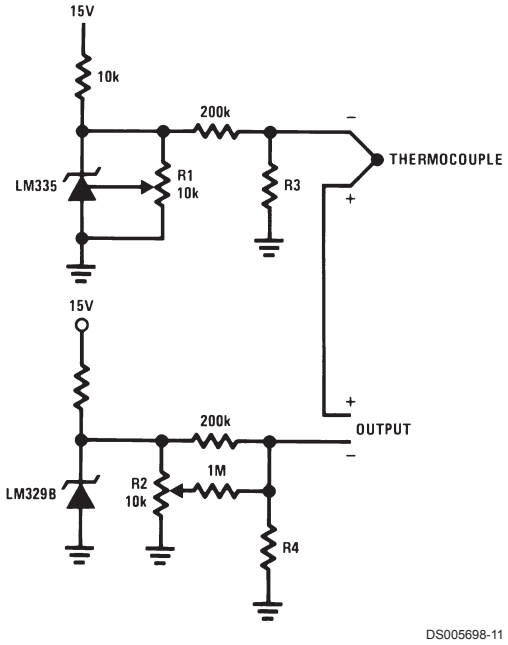

*Select R3 and R4 for thermocouple type

THERMO-COUPLE	R3	R4	SEEBECK COEFFICIENT
J	1.05K	385Ω	52.3 μV/˚C
T	856Ω	315Ω	42.8 μV/˚C
K	816Ω	300Ω	40.8 μV/˚C
S	128Ω	46.3Ω	6.4 μV/˚C

Adjustments:

1. Adjust R1 for the voltage across R3 equal to the Seebeck Coefficient times ambient temperature in degrees Kelvin.
2. Adjust R2 for voltage across R4 corresponding to thermocouple

J	14.32 mV
T	11.79 mV
K	11.17 mV
S	1.768 mV

Typical Applications (Continued)

Centigrade Calibrated Thermocouple Thermometer

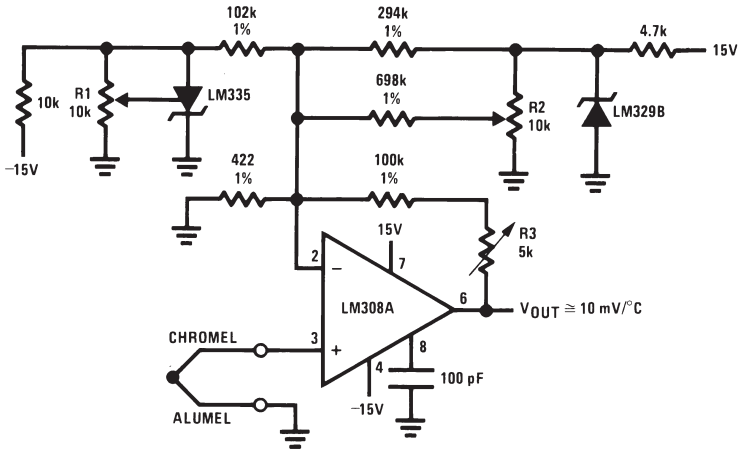

DS005698-12

Terminate thermocouple reference junction in close proximity to LM335.

Adjustments:

1. Apply signal in place of thermocouple and adjust R3 for a gain of 245.7.
2. Short non-inverting input of LM308A and output of LM329B to ground.
3. Adjust R1 so that V_{OUT} = 2.982V @ 25˚C.
4. Remove short across LM329B and adjust R2 so that V_{OUT} = 246 mV @ 25˚C.
5. Remove short across thermocouple.

Fast Charger for Nickel-Cadmium Batteries

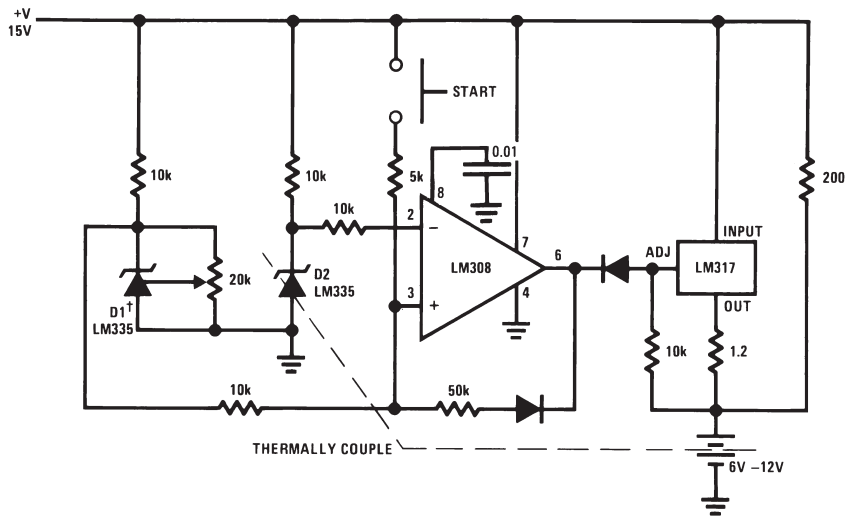

DS005698-13

Differential Temperature Sensor

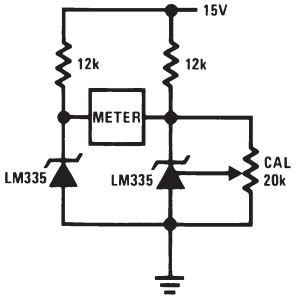

DS005698-7

†Adjust D1 to 50 mV greater V_Z than D2.

Charge terminates on 5˚C temperature rise. Couple D2 to battery.

Typical Applications (Continued)

Differential Temperature Sensor

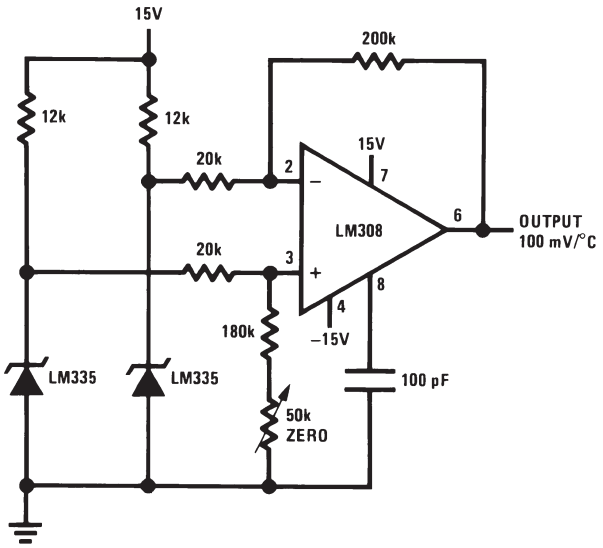

DS005698-14

Variable Offset Thermometer

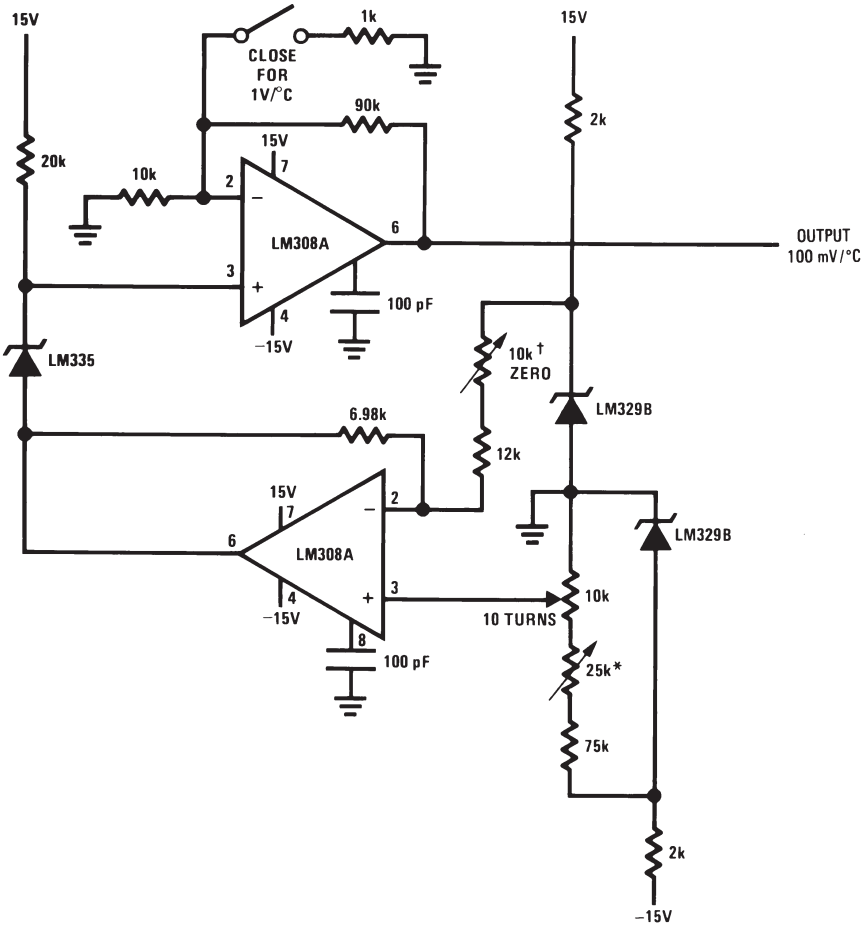

DS005698-15

†Adjust for zero with sensor at 0˚C and 10T pot set at 0˚C
*Adjust for zero output with 10T pot set at 100˚C and sensor at 100˚C
Output reads difference between temperature and dial setting of 10T pot

Typical Applications (Continued)

Ground Referred Centigrade Thermometer

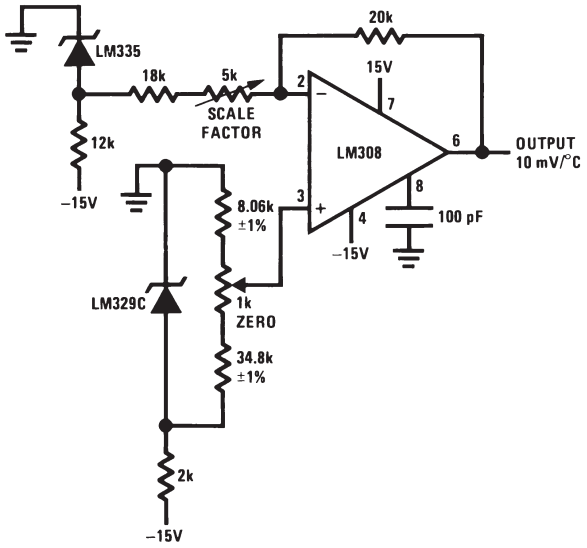

DS005698-16

Air Flow Detector*

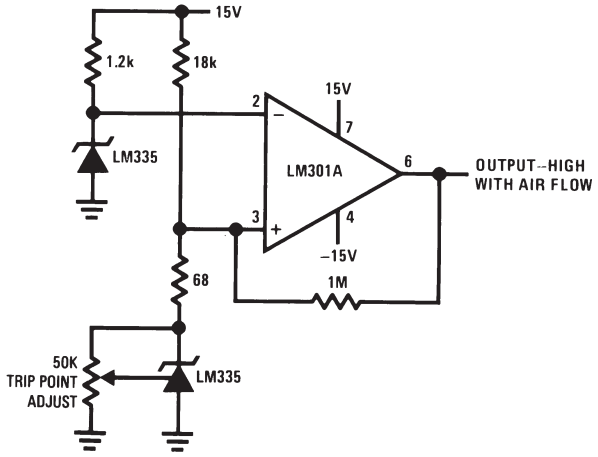

DS005698-17

*Self heating is used to detect air flow

Definition of Terms

Operating Output Voltage: The voltage appearing across the positive and negative terminals of the device at specified conditions of operating temperature and current.

Uncalibrated Temperature Error: The error between the operating output voltage at 10 mV/˚K and case temperature at specified conditions of current and case temperature.

Calibrated Temperature Error: The error between operating output voltage and case temperature at 10 mV/˚K over a temperature range at a specified operating current with the 25˚C error adjusted to zero.

Physical Dimensions inches (millimeters) unless otherwise noted

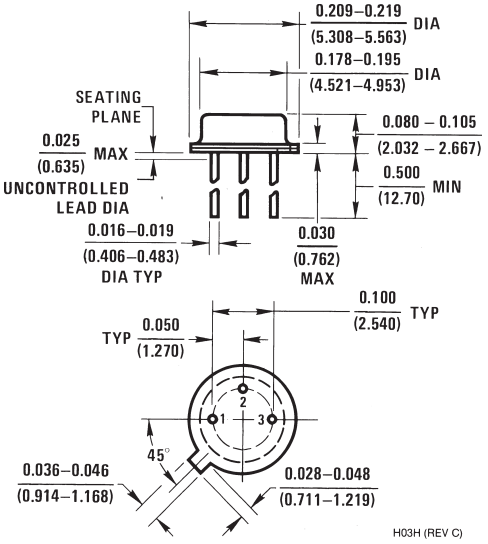

Metal Can Package (H)
Order Number LM135H, LM235H, LM335H, LM135AH, LM235AH or LM335AH
NS Package Number H03H

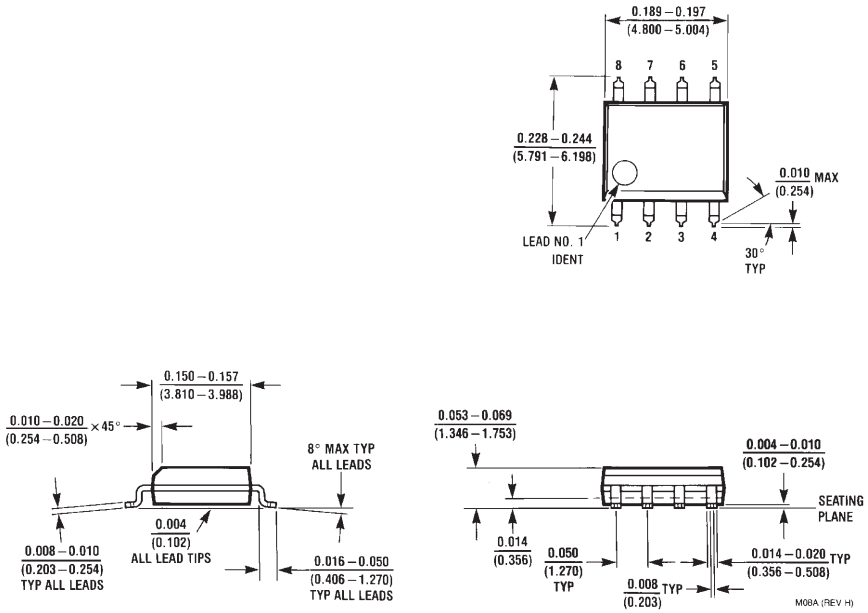

8-Lead Molded Small Outline Package (M)
Order Number LM335M
NS Package Number M08A

Physical Dimensions inches (millimeters) unless otherwise noted (Continued)

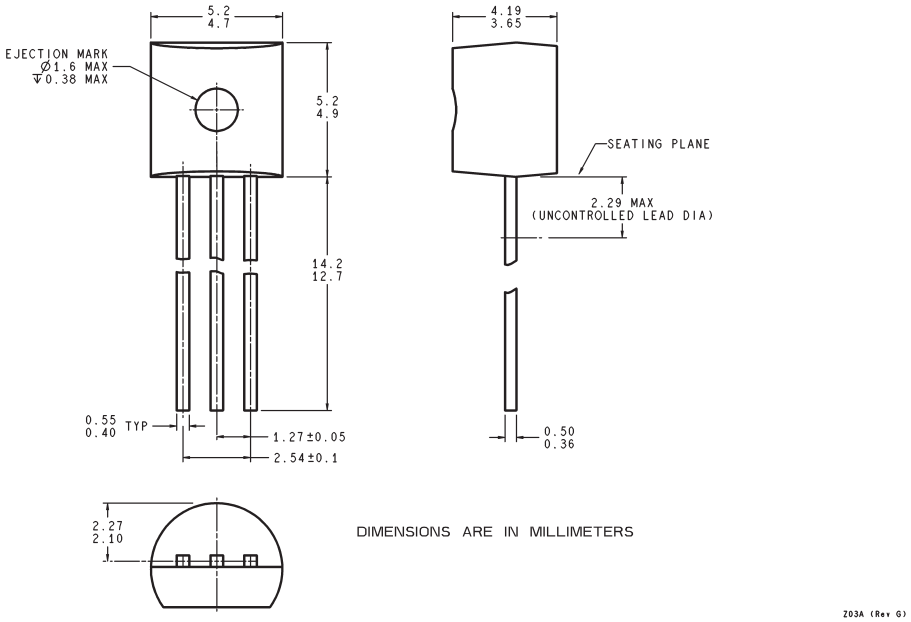

Plastic Package
Order Number LM335Z or LM335AZ
NS Package Z03A

LIFE SUPPORT POLICY

NATIONAL'S PRODUCTS ARE NOT AUTHORIZED FOR USE AS CRITICAL COMPONENTS IN LIFE SUPPORT DEVICES OR SYSTEMS WITHOUT THE EXPRESS WRITTEN APPROVAL OF THE PRESIDENT AND GENERAL COUNSEL OF NATIONAL SEMICONDUCTOR CORPORATION. As used herein:

1. Life support devices or systems are devices or systems which, (a) are intended for surgical implant into the body, or (b) support or sustain life, and whose failure to perform when properly used in accordance with instructions for use provided in the labeling, can be reasonably expected to result in a significant injury to the user.
2. A critical component is any component of a life support device or system whose failure to perform can be reasonably expected to cause the failure of the life support device or system, or to affect its safety or effectiveness.

National Semiconductor Corporation
Americas
Tel: 1-800-272-9959
Fax: 1-800-737-7018
Email: support@nsc.com
www.national.com

National Semiconductor Europe
Fax: +49 (0) 180-530 85 86
Email: europe.support@nsc.com
Deutsch Tel: +49 (0) 69 9508 6208
English Tel: +44 (0) 870 24 0 2171
Français Tel: +33 (0) 1 41 91 8790

National Semiconductor Asia Pacific Customer Response Group
Tel: 65-2544466
Fax: 65-2504466
Email: ap.support@nsc.com

National Semiconductor Japan Ltd.
Tel: 81-3-5639-7560
Fax: 81-3-5639-7507

National does not assume any responsibility for use of any circuitry described, no circuit patent licenses are implied and National reserves the right at any time without notice to change said circuitry and specifications.