National Semiconductor

January 2000

LM386
Low Voltage Audio Power Amplifier

General Description

The LM386 is a power amplifier designed for use in low voltage consumer applications. The gain is internally set to 20 to keep external part count low, but the addition of an external resistor and capacitor between pins 1 and 8 will increase the gain to any value up to 200.

The inputs are ground referenced while the output is automatically biased to one half the supply voltage. The quiescent power drain is only 24 milliwatts when operating from a 6 volt supply, making the LM386 ideal for battery operation.

Features

- Battery operation
- Minimum external parts
- Wide supply voltage range: 4V–12V or 5V–18V
- Low quiescent current drain: 4 mA
- Voltage gains from 20 to 200
- Ground referenced input
- Self-centering output quiescent voltage
- Low distortion
- Available in 8 pin MSOP package

Applications

- AM-FM radio amplifiers
- Portable tape player amplifiers
- Intercoms
- TV sound systems
- Line drivers
- Ultrasonic drivers
- Small servo drivers
- Power converters

Equivalent Schematic and Connection Diagrams

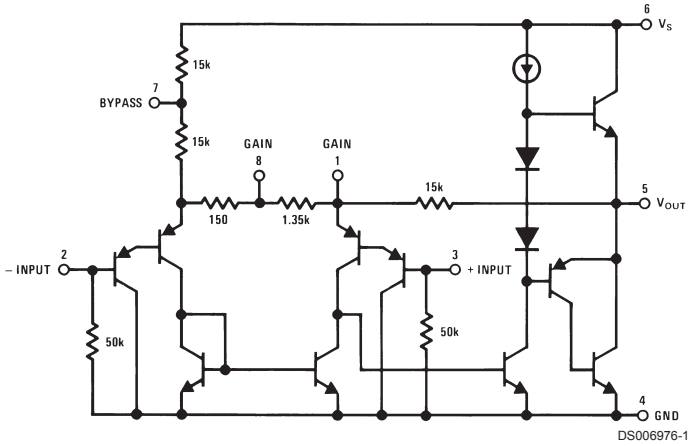

DS006976-1

Small Outline, Molded Mini Small Outline, and Dual-In-Line Packages

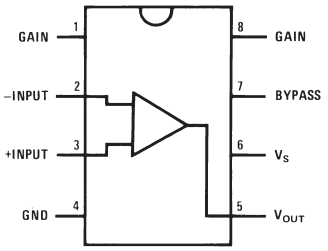

DS006976-2

Top View
Order Number LM386M-1, LM386MM-1, LM386N-1, LM386N-3 or LM386N-4
See NS Package Number M08A, MUA08A or N08E

© 2000 National Semiconductor Corporation

Absolute Maximum Ratings (Note 2)

If Military/Aerospace specified devices are required, please contact the National Semiconductor Sales Office/ Distributors for availability and specifications.

Supply Voltage	
(LM386N-1, -3, LM386M-1)	15V
Supply Voltage (LM386N-4)	22V
Package Dissipation (Note 3)	
(LM386N)	1.25W
(LM386M)	0.73W
(LM386MM-1)	0.595W
Input Voltage	±0.4V
Storage Temperature	−65˚C to +150˚C
Operating Temperature	0˚C to +70˚C
Junction Temperature	+150˚C
Soldering Information	
Dual-In-Line Package	
Soldering (10 sec)	+260˚C
Small Outline Package	
(SOIC and MSOP)	
Vapor Phase (60 sec)	+215˚C
Infrared (15 sec)	+220˚C

See AN-450 “Surface Mounting Methods and Their Effect on Product Reliability” for other methods of soldering surface mount devices.

Thermal Resistance	
θ_{JC} (DIP)	37˚C/W
θ_{JA} (DIP)	107˚C/W
θ_{JC} (SO Package)	35˚C/W
θ_{JA} (SO Package)	172˚C/W
θ_{JA} (MSOP)	210˚C/W
θ_{JC} (MSOP)	56˚C/W

Electrical Characteristics (Notes 1, 2)

T_A = 25˚C

Parameter	Conditions	Min	Typ	Max	Units
Operating Supply Voltage (V_S)					
LM386N-1, -3, LM386M-1, LM386MM-1		4		12	V
LM386N-4		5		18	V
Quiescent Current (I_Q)	V_S = 6V, V_{IN} = 0		4	8	mA
Output Power (P_{OUT})					
LM386N-1, LM386M-1, LM386MM-1	V_S = 6V, R_L = 8Ω, THD = 10%	250	325		mW
LM386N-3	V_S = 9V, R_L = 8Ω, THD = 10%	500	700		mW
LM386N-4	V_S = 16V, R_L = 32Ω, THD = 10%	700	1000		mW
Voltage Gain (A_V)	V_S = 6V, f = 1 kHz		26		dB
	10 μF from Pin 1 to 8		46		dB
Bandwidth (BW)	V_S = 6V, Pins 1 and 8 Open		300		kHz
Total Harmonic Distortion (THD)	V_S = 6V, R_L = 8Ω, P_{OUT} = 125 mW f = 1 kHz, Pins 1 and 8 Open		0.2		%
Power Supply Rejection Ratio (PSRR)	V_S = 6V, f = 1 kHz, C_{BYPASS} = 10 μF Pins 1 and 8 Open, Referred to Output		50		dB
Input Resistance (R_{IN})			50		kΩ
Input Bias Current (I_{BIAS})	V_S = 6V, Pins 2 and 3 Open		250		nA

Note 1: All voltages are measured with respect to the ground pin, unless otherwise specified.

Note 2: Absolute Maximum Ratings indicate limits beyond which damage to the device may occur. Operating Ratings indicate conditions for which the device is functional, but do not guarantee specific performance limits. Electrical Characteristics state DC and AC electrical specifications under particular test conditions which guarantee specific performance limits. This assumes that the device is within the Operating Ratings. Specifications are not guaranteed for parameters where no limit is given, however, the typical value is a good indication of device performance.

Note 3: For operation in ambient temperatures above 25˚C, the device must be derated based on a 150˚C maximum junction temperature and 1) a thermal resistance of 107˚C/W junction to ambient for the dual-in-line package and 2) a thermal resistance of 170˚C/W for the small outline package.

Application Hints

GAIN CONTROL

To make the LM386 a more versatile amplifier, two pins (1 and 8) are provided for gain control. With pins 1 and 8 open the 1.35 kΩ resistor sets the gain at 20 (26 dB). If a capacitor is put from pin 1 to 8, bypassing the 1.35 kΩ resistor, the gain will go up to 200 (46 dB). If a resistor is placed in series with the capacitor, the gain can be set to any value from 20 to 200. Gain control can also be done by capacitively coupling a resistor (or FET) from pin 1 to ground.

Additional external components can be placed in parallel with the internal feedback resistors to tailor the gain and frequency response for individual applications. For example, we can compensate poor speaker bass response by frequency shaping the feedback path. This is done with a series RC from pin 1 to 5 (paralleling the internal 15 kΩ resistor). For 6 dB effective bass boost: R ≅ 15 kΩ, the lowest value for good stable operation is R = 10 kΩ if pin 8 is open. If pins 1 and 8 are bypassed then R as low as 2 kΩ can be used. This restriction is because the amplifier is only compensated for closed-loop gains greater than 9.

INPUT BIASING

The schematic shows that both inputs are biased to ground with a 50 kΩ resistor. The base current of the input transistors is about 250 nA, so the inputs are at about 12.5 mV when left open. If the dc source resistance driving the LM386 is higher than 250 kΩ it will contribute very little additional offset (about 2.5 mV at the input, 50 mV at the output). If the dc source resistance is less than 10 kΩ, then shorting the unused input to ground will keep the offset low (about 2.5 mV at the input, 50 mV at the output). For dc source resistances between these values we can eliminate excess offset by putting a resistor from the unused input to ground, equal in value to the dc source resistance. Of course all offset problems are eliminated if the input is capacitively coupled.

When using the LM386 with higher gains (bypassing the 1.35 kΩ resistor between pins 1 and 8) it is necessary to bypass the unused input, preventing degradation of gain and possible instabilities. This is done with a 0.1 μF capacitor or a short to ground depending on the dc source resistance on the driven input.

Typical Performance Characteristics

Quiescent Supply Current vs Supply Voltage

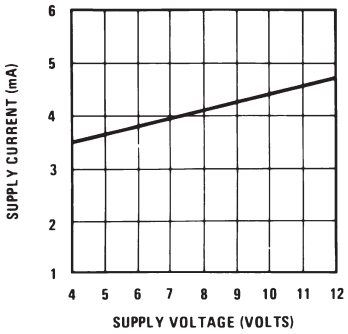

DS006976-5

Power Supply Rejection Ratio (Referred to the Output) vs Frequency

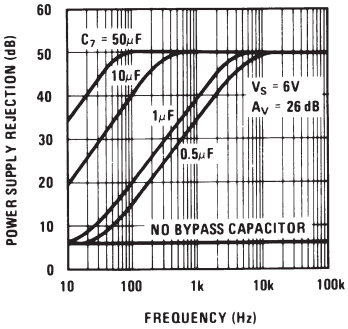

DS006976-12

Peak-to-Peak Output Voltage Swing vs Supply Voltage

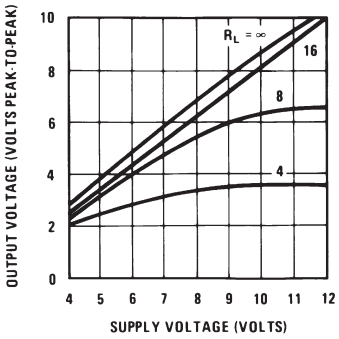

DS006976-13

Voltage Gain vs Frequency

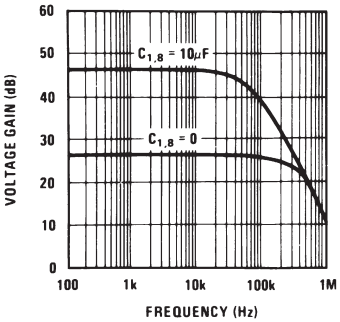

DS006976-14

Distortion vs Frequency

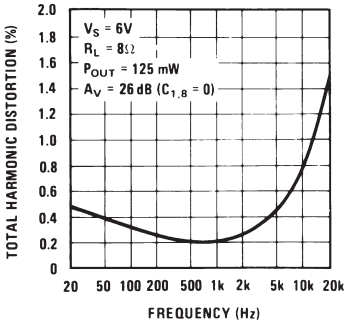

DS006976-15

Distortion vs Output Power

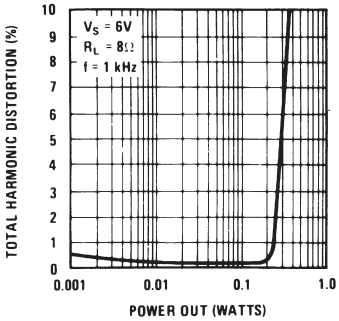

DS006976-16

Device Dissipation vs Output Power — 4Ω Load

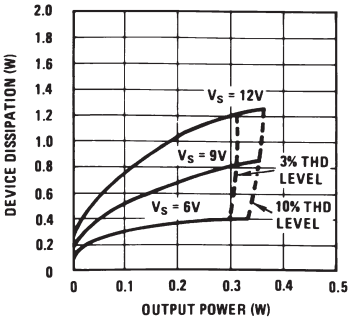

DS006976-17

Device Dissipation vs Output Power — 8Ω Load

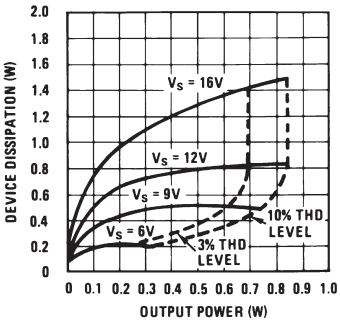

DS006976-18

Device Dissipation vs Output Power — 16Ω Load

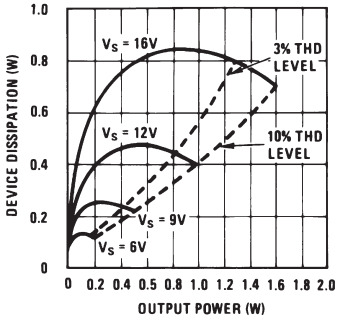

DS006976-19

Typical Applications

Amplifier with Gain = 20
Minimum Parts

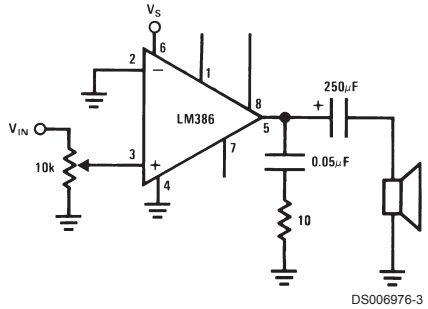

Amplifier with Gain = 200

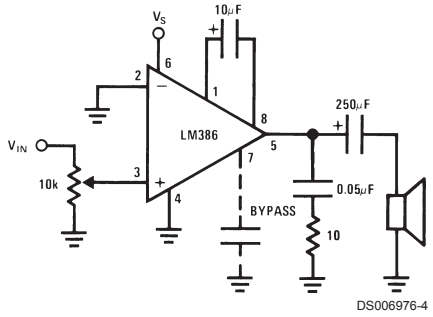

Amplifier with Gain = 50

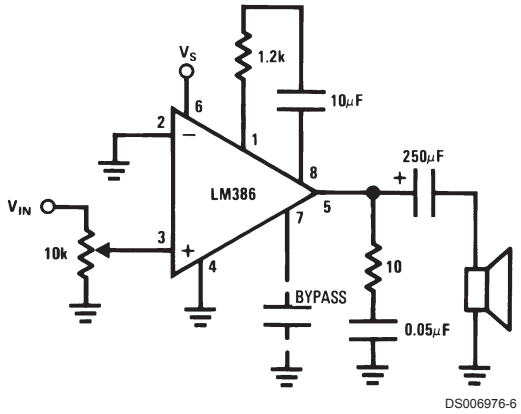

Low Distortion Power Wienbridge Oscillator

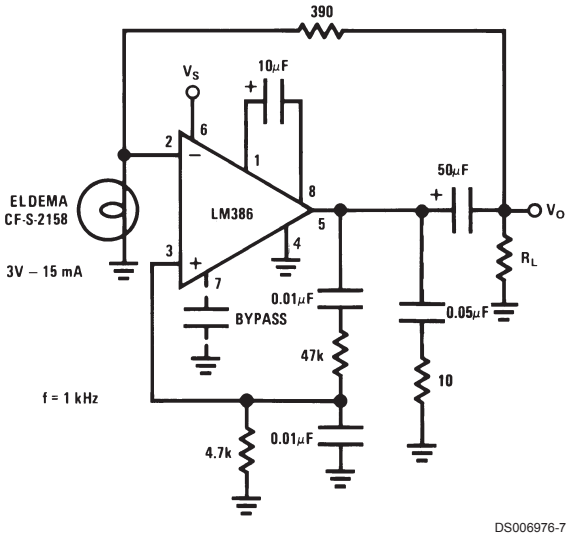

Amplifier with Bass Boost

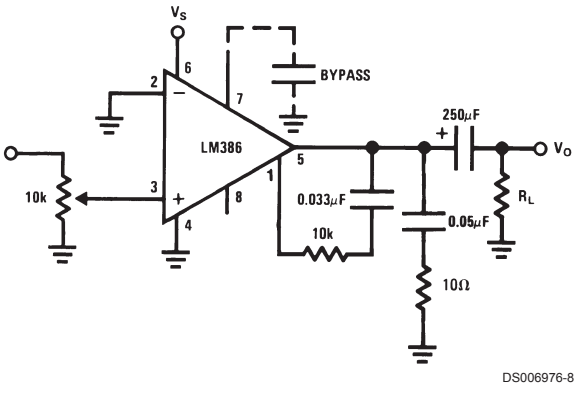

Square Wave Oscillator

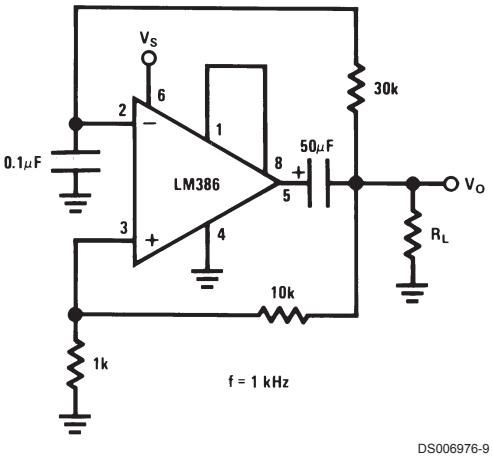

Typical Applications (Continued)

Frequency Response with Bass Boost

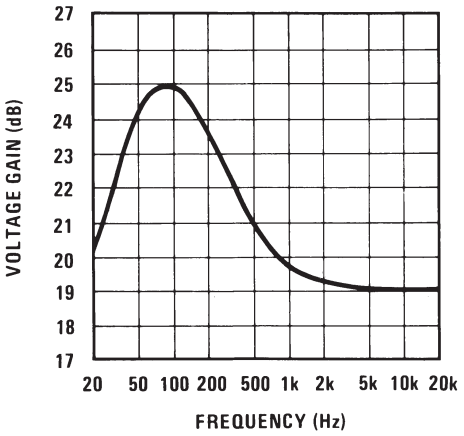

DS006976-10

AM Radio Power Amplifier

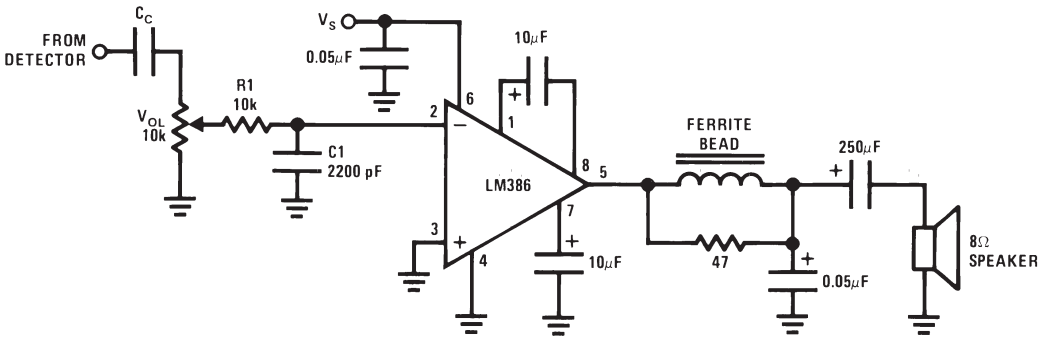

DS006976-11

Note 4: Twist Supply lead and supply ground very tightly.

Note 5: Twist speaker lead and ground very tightly.

Note 6: Ferrite bead in Ferroxcube K5-001-001/3B with 3 turns of wire.

Note 7: R1C1 band limits input signals.

Note 8: All components must be spaced very closely to IC.

Physical Dimensions inches (millimeters) unless otherwise noted

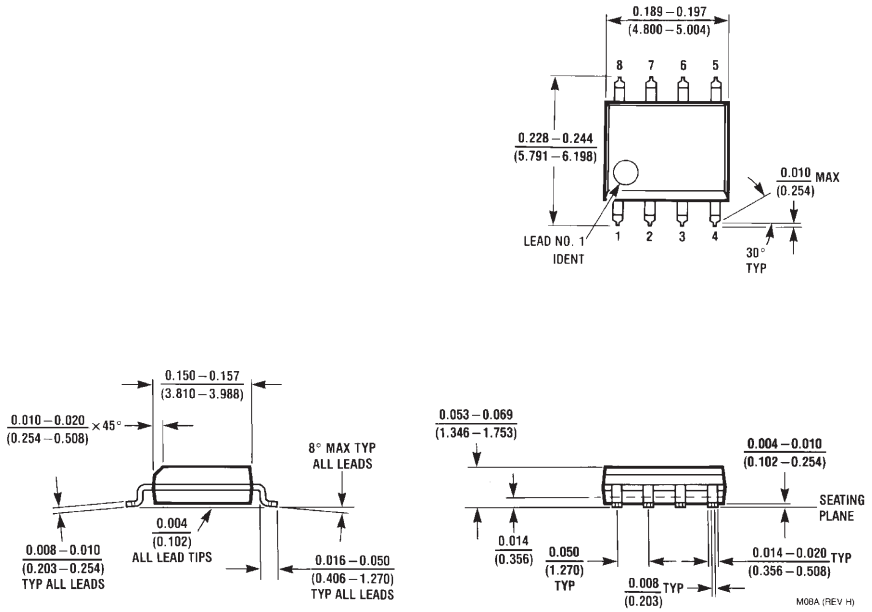

SO Package (M)
Order Number LM386M-1
NS Package Number M08A

Physical Dimensions inches (millimeters) unless otherwise noted (Continued)

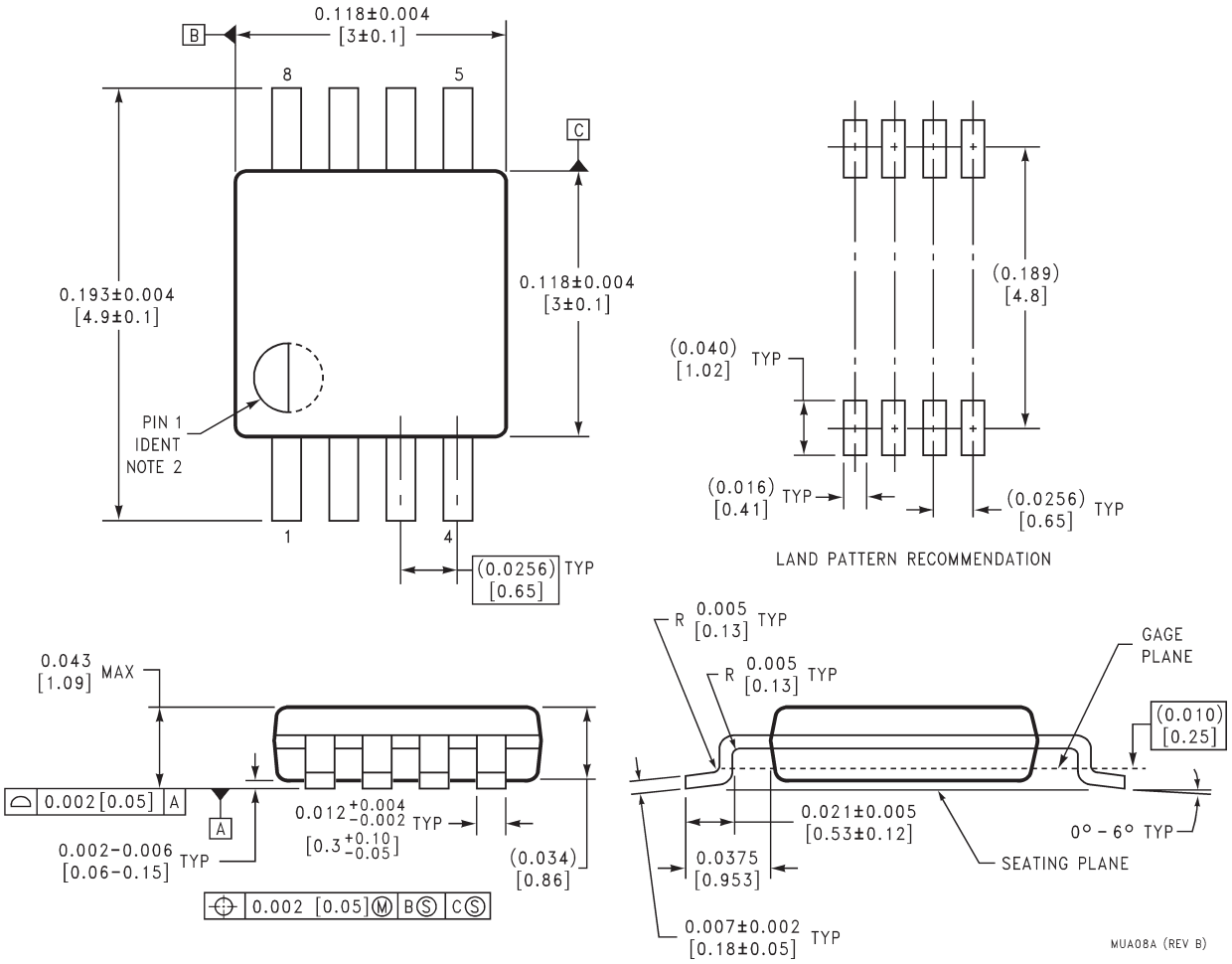

8-Lead (0.118" Wide) Molded Mini Small Outline Package
Order Number LM386MM-1
NS Package Number MUA08A

Physical Dimensions inches (millimeters) unless otherwise noted (Continued)

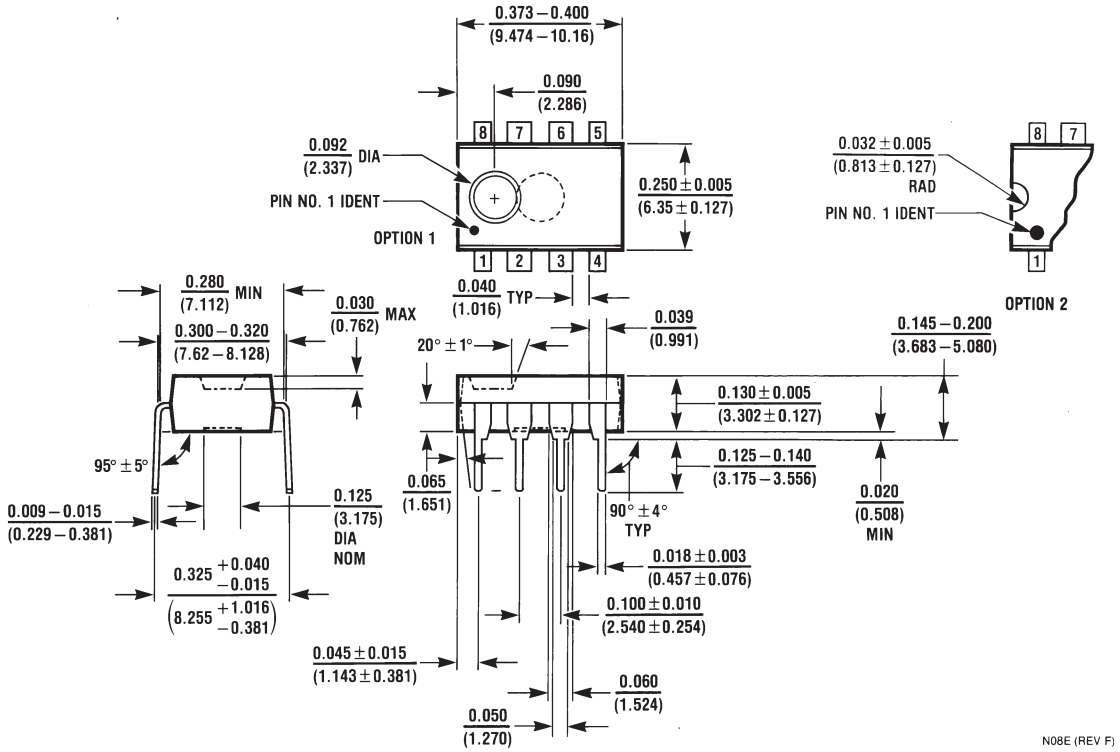

Dual-In-Line Package (N)
Order Number LM386N-1, LM386N-3 or LM386N-4
NS Package Number N08E

LIFE SUPPORT POLICY

NATIONAL'S PRODUCTS ARE NOT AUTHORIZED FOR USE AS CRITICAL COMPONENTS IN LIFE SUPPORT DEVICES OR SYSTEMS WITHOUT THE EXPRESS WRITTEN APPROVAL OF THE PRESIDENT AND GENERAL COUNSEL OF NATIONAL SEMICONDUCTOR CORPORATION. As used herein:

1. Life support devices or systems are devices or systems which, (a) are intended for surgical implant into the body, or (b) support or sustain life, and whose failure to perform when properly used in accordance with instructions for use provided in the labeling, can be reasonably expected to result in a significant injury to the user.
2. A critical component is any component of a life support device or system whose failure to perform can be reasonably expected to cause the failure of the life support device or system, or to affect its safety or effectiveness.

National Semiconductor Corporation
Americas
Tel: 1-800-272-9959
Fax: 1-800-737-7018
Email: support@nsc.com

www.national.com

National Semiconductor Europe
Fax: +49 (0) 1 80-530 85 86
Email: europe.support@nsc.com
Deutsch Tel: +49 (0) 1 80-530 85 85
English Tel: +49 (0) 1 80-532 78 32
Français Tel: +49 (0) 1 80-532 93 58
Italiano Tel: +49 (0) 1 80-534 16 80

National Semiconductor Asia Pacific Customer Response Group
Tel: 65-2544466
Fax: 65-2504466
Email: sea.support@nsc.com

National Semiconductor Japan Ltd.
Tel: 81-3-5639-7560
Fax: 81-3-5639-7507

National does not assume any responsibility for use of any circuitry described, no circuit patent licenses are implied and National reserves the right at any time without notice to change said circuitry and specifications.