LM134
LM234 - LM334

THREE TERMINAL ADJUSTABLE CURRENT SOURCES

- OPERATES FROM 1V TO 40V
- 0.02%/V CURRENT REGULATION
- PROGRAMMABLE FROM 1µA TO 10mA
- ±3% INITIAL ACCURACY

Z
TO92
(Plastic Package)

D
SO8
(Plastic Micropackage)

DESCRIPTION

The LM134/LM234/LM334 are 3-terminal adjustable current sources characterized by:

- ❑ an operating current range of 10000: 1
- ❑ an excellent current regulation
- ❑ a wide dynamic voltage range of 1V t 10V

The current is determined by an external resistor without requiring other external components.

Reverse voltages of up to 20V will only draw a current of several microamperes. This enables the circuit to operate as a rectifier and as a source of current in a.c. applications.

For the LM134/LM234/LM334, the voltage on the control pin is 64mV at +25°C and is directly proportional to the absolute temperature (°K). The simplest external resistor connection generates a current with ≈ 0.33%/°C temperature dependence. Zero drift can be obtained by adding an additional resistor and a diode to the external circuit.

ORDER CODE

Part Number	Temperature Range	Package	
		Z	D
LM134	-55°C, +125°C	•	•
LM234	-25°C, +100°C	•	•
LM334	0°C, +70°C	•	•

Z = TO92 Plastic package - also available in Bulk (Z), Tape & Reel (ZT) and Ammo Pack (AP)
D = Small Outline Package (SO) - also available in Tape & Reel (DT)

PIN CONNECTIONS (top view)

TO92
(Top view)

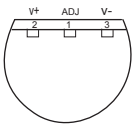

SO8
(Top view)

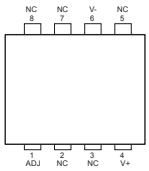

SCHEMATIC DIAGRAM

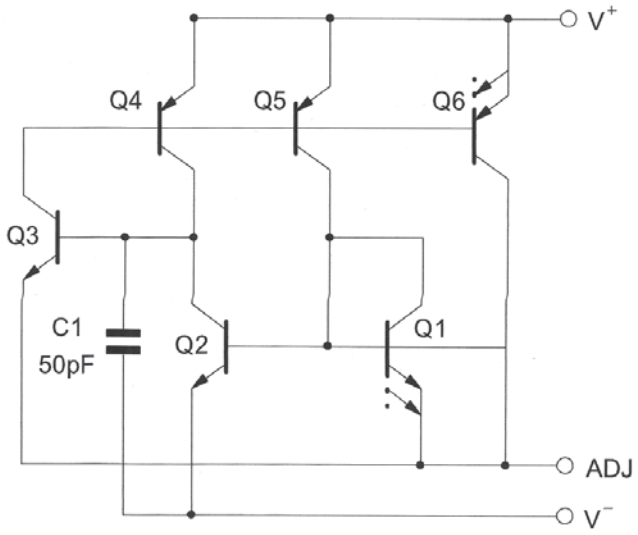

ABSOLUTE MAXIMUM RATINGS

Symbol	Parameter	LM134	LM234	LM334	Unit
	Voltage V+ to V- Forward Reverse	40 20		30 20	V
V_{ADJ}^{-}	ADJ Pin to V^{-} Voltage	5			V
I_{SET}	Set Current	10			mA
P_{tot}	Power Dissipation	400			mW
T_{Stg}	Storage Temperature Range	-65 to +150			°C
Toper	Operating Free-air Temperature Range	-55 to +125	-25 to +100	0 to +70	°C

ELECTRICAL CHARACTERISTICS

Tj = +25°C with pulse testing so that junction temperature does not change during testing (unless otherwise specified)

Parameter	LM134 - LM234			LM334			Unit
	Min.	Typ.	Max.	Min.	Typ.	Max.	
Set Current Error (V^+ = +2.5V) -[1)]							
10µA ≤ I_{SET} ≤ 1mA			3			6	%
1mA ≤ I_{SET} ≤ 5mA			5			8	
2µA ≤ I_{SET} ≤ 10µA			8			12	
Ratio of Set Current to V_- Current							
10µA ≤ I_{SET} ≤ 1mA	14	18	23	14	18	26	
1mA ≤ I_{SET} ≤ 5mA		14			14		
2µA ≤ I_{SET} ≤ 10µA		14			14		
Minimum Operating Voltage							
2µA ≤ I_{SET} ≤ 100µA		0.8			0.8		V
100µA ≤ I_{SET} ≤ 1mA		0.9			0.9		
1mA ≤ I_{SET} ≤ 5mA		1			1		
Average Change in Set Current with Input Voltage							
2µA ≤ I_{SET} ≤ 1mA							
+1.5V ≤ V_+ ≤ +5V		0.02	0.05		0.02	0.1	
+5V ≤ V_+ ≤ +40V		0.01	0.03		0.01	0.05	% / V
1mA ≤ I_{SET} ≤ 5mA							
+1.5V ≤ V_+ ≤ +5V		0.03			0.03		
+5V ≤ V_+ ≤ +40V		0.02			0.02		
Temperature Dependence of set current - [2)]							
25µA ≤ I_{SET} ≤ 1mA	0.96 T	T	1.04 T	0.96 T	T	1.04 T	
Effective Shunt Capacitance		15			15		pF

1. Set current is the current flowing into the V+ pin. It is determined by the following formula Iset = 67.7mV/Rset (Tj = +25°C)
   Set current error is expressed as a percent deviation from this amount

2. Iset is directly proportional to absolute temperature (°K). Iset at any temperature can be calculated from Iset = Io (T/To) where Io is Iset measured at To (°K)

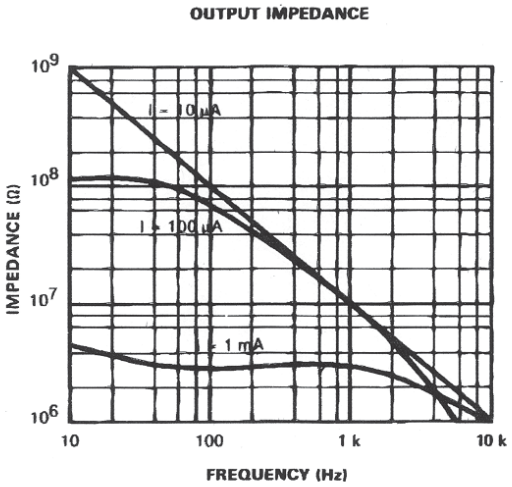

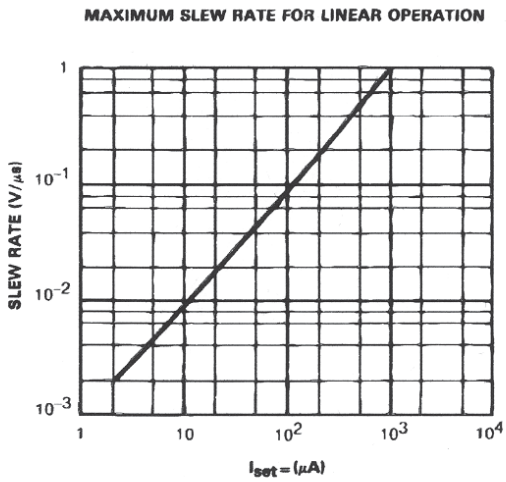

START UP

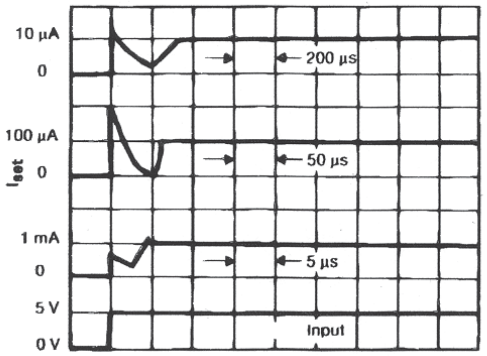

TIME (SCALE CHANGES AT EACH CURRENT LEVEL).

TRANSIENT RESPONSE

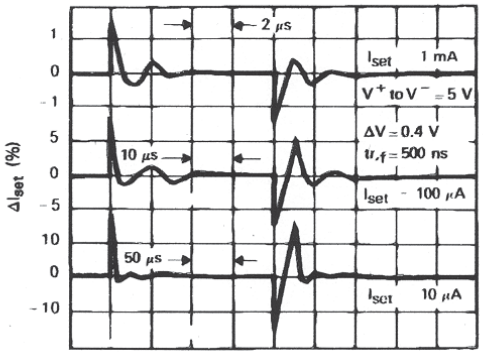

TIME (SCALE CHANGES AT EACH CURRENT LEVEL).

VOLTAGE ACROSS R_{set}

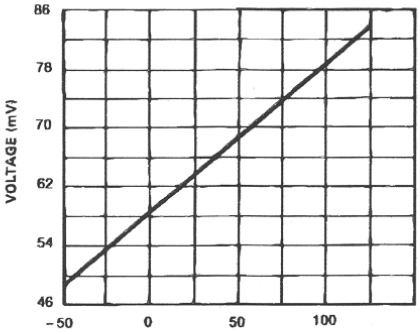

CURRENT NOISE

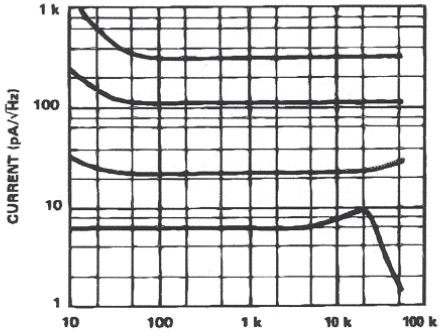

TURN-ON VOLTAGE

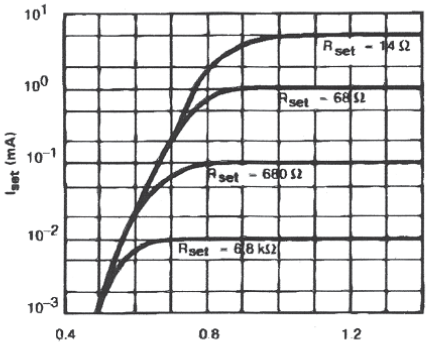

RATIO OF I_{set} to V^- CURRENT

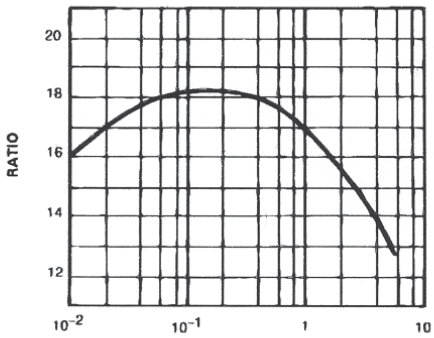

APPLICATION HINTS

SLEW RATE

At slew rates above a threshold (see curve) the LM134, LM234, LM334 can have a non-linear current characteristic. The slew rate at which this takes place is directly proportional to Iset. At Iset = 10µA, dv/dt max. = 0.01V/µs ; at Iset = 1mA, dv/dt max. = 1V/µs. Slew rates of more than 1V/µs do not damage the circuit nor do they produce high currents.

THERMAL EFFECTS

Internal heating can have a significant effect on current regulation for an Iset above 100µA. For example, each increase of 1V in the voltage across the LM134 at Iset = 1mA will increase the junction temperature by ≈ 0.4°C (in still air). The output current (Iset) has a temperature coefficient of about 0.33%/°C. Thus the change in current due to the increase in temperature will be (0.4) (0.33) = 0.132%. This is degradation of 10 : 1 in regulation versus the true electrical effects. Thermal effects should be taken into account when d.c. regulation is critical and Iset is higher than 100µA.

SHUNT CAPACITANCE

In certain applications, the 15pF value for the shunt capacitance should be reduced :

- because of loading problems,
- because of limitation of output impedance of the current source in a.c. applications. This reduction of capacitance can be easily carried out by adding a FET as indicated in the typical applications.

The value of this capacitance can be reduced by at least 3pF and regulation can be improved by an order of magnitude without any modifications of the d.c. characteristics (except for the minimum input voltage).

NOISE

The current noise produced by LM134, LM234, LM334 is about 4 times that of a transistor. If the LM134, LM234, LM334 is used as an active load for a transistor amplifier, the noise at the input will increase by about 12dB. In most cases this is acceptable, and a single amplifier can be built with a voltage gain higher than 2000.

LEAD RESISTANCE

The sense voltage which determines the current of the LM134, LM234, LM334 is less than 100mV. At this level, the thermocouple effects and the connection resistance should be reduced by locating the current setting resistor close to the device. Do not use sockets for the ICs. A contact resistance of 0.7Ω is sufficient to decrease the output current by 1% at the 1mA level.

SENSING TEMPERATURE

The LM134, LM234, LM334 are excellent remote controlled temperature sensors because their operation as current sources preserves their accuracy even in the case of long connecting wires. The output current is directly proportional to the absolute temperature in Kelvin degrees according to the following equation.

$$Iset = \frac{(227\mu V/°K)\ (T)}{Rset}$$

The calibration of the LM134, LM234, LM334 is simplified by the fact that most of the initial accuracy is due to gain limitation (slope error) and not an offset. Gain adjustment is a one point trim because the output of the device extrapolates to zero at 0°K.

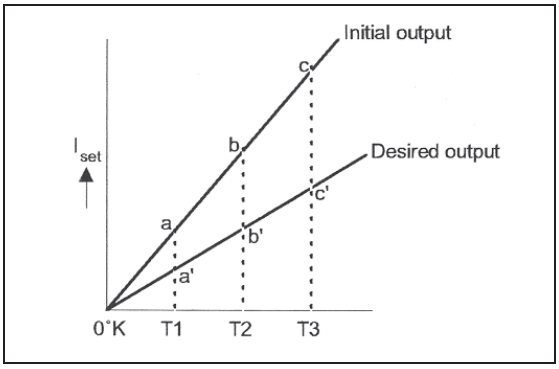

This particularity of the LM134, LM234, LM334 is illustrated in the above diagram. Line abc represents the sensor current before adjustment and line a'b'c' represents the desired output. A gain adjustment provided at T2 will move the output from b to b' and will correct the slope at the same time so that the output at T1 and T3 will be correct. This gain adjustment can be carried out by means of Rset or the load resistor used in the circuit. After adjustment, the slope error should be less than 1%. A low temperature coefficient for Rset is necessary to keep this accuracy. A 33ppm/°C temperature drift of Rset will give an error of 1% on the slope because the resistance follows the same temperature variations as the LM134, LM234, LM334. Three wires are required to isolate Rset from the LM134, LM234, LM334. Since this solution is not recommended. Metal-film resistors with a drift less than 20ppm/°C are now available. Wirewound resistors can be used when very high stability is required.

TYPICAL APPLICATIONS

Figure 1 : Basic 2-terminal Current Source

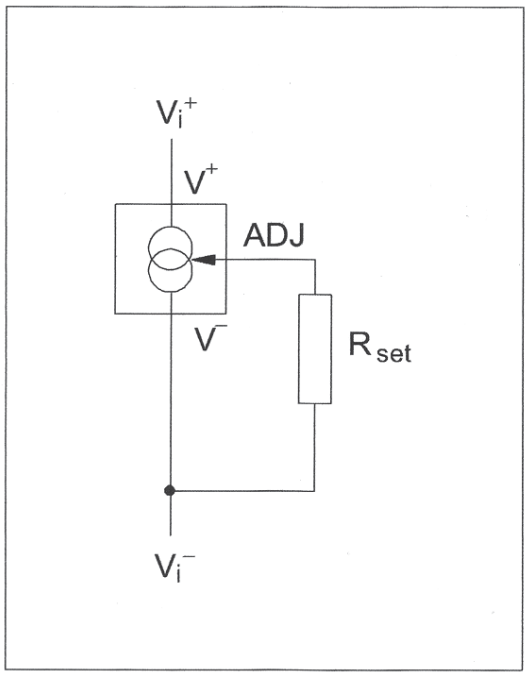

Figure 2 : Alternate Trimming Technique

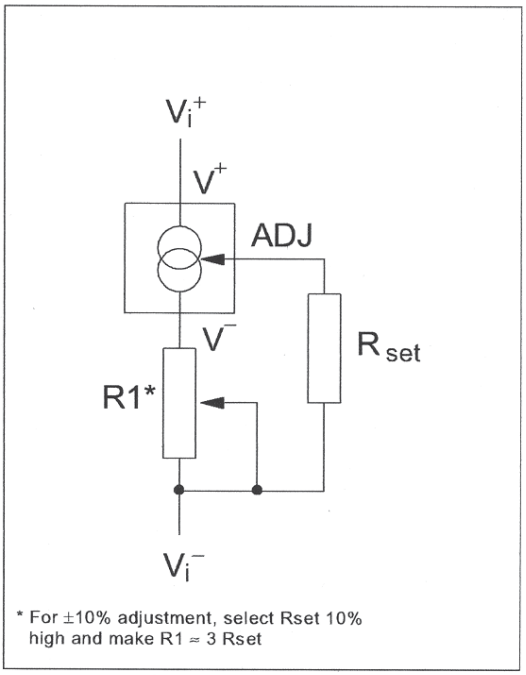

Figure 3 : Terminating Remote Sensor for Voltage Output

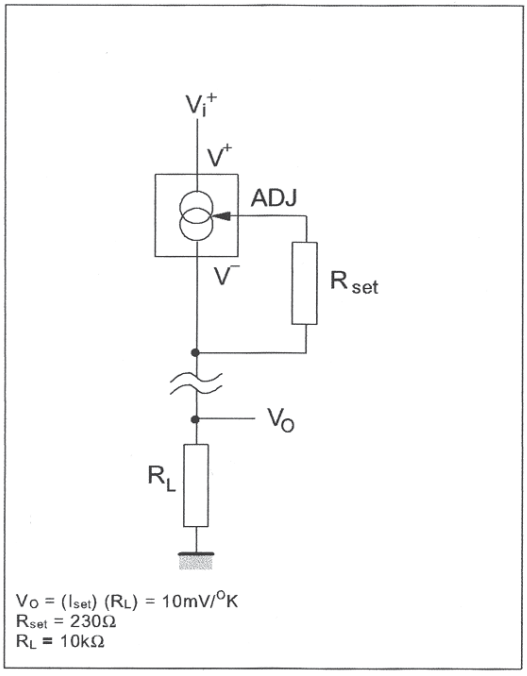

Figure 4 : Zero Temperature Coefficient Current Source

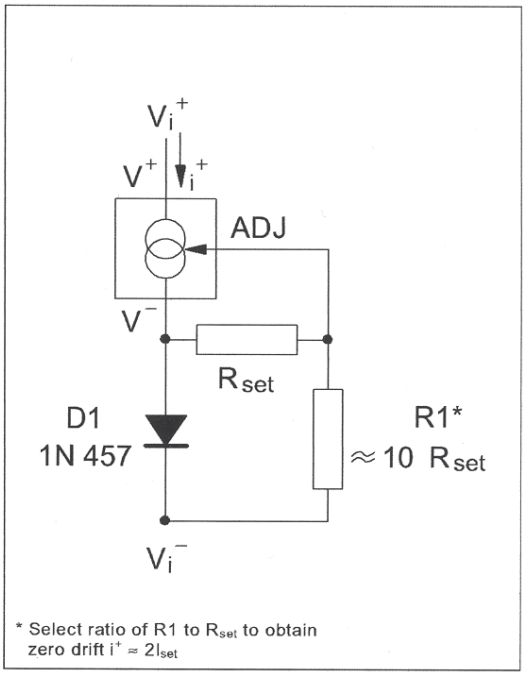

Figure 5 : Low Output Impedance Thermometer

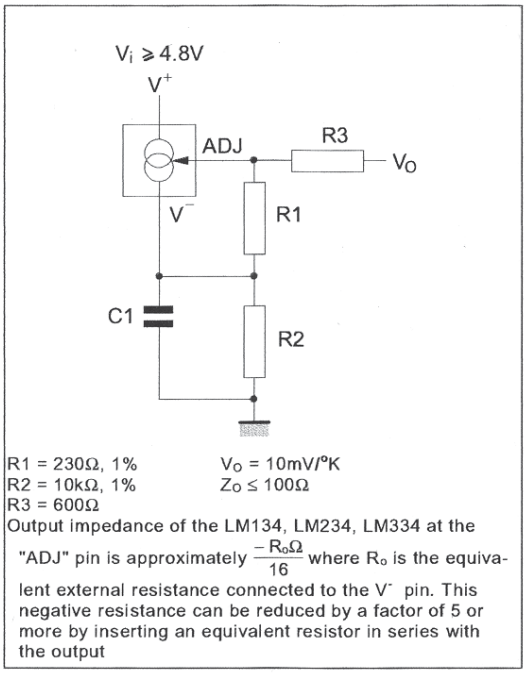

Figure 6 : Low Output Impedance Thermometer

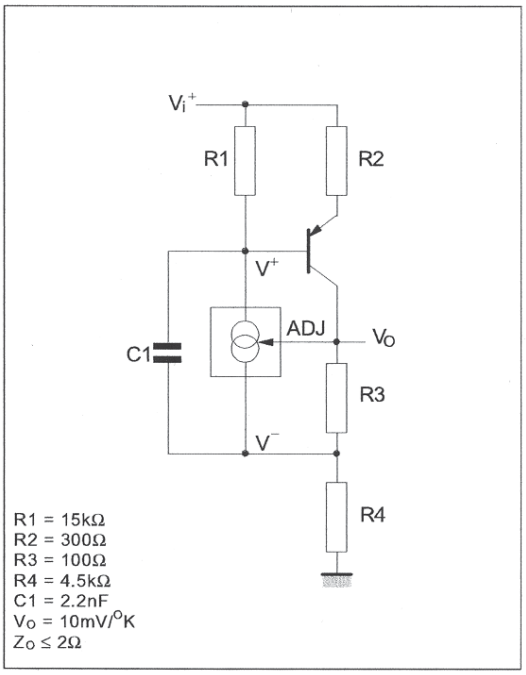

Figure 7 : Micropower Bias

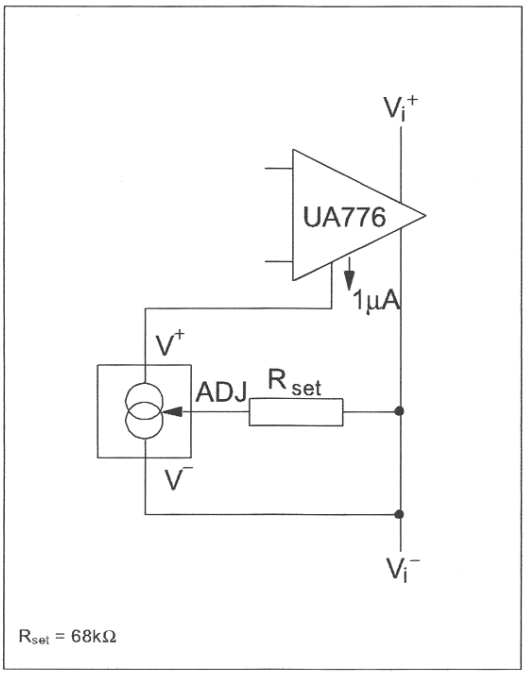

Figure 8 : Low Input Voltage Reference Driver

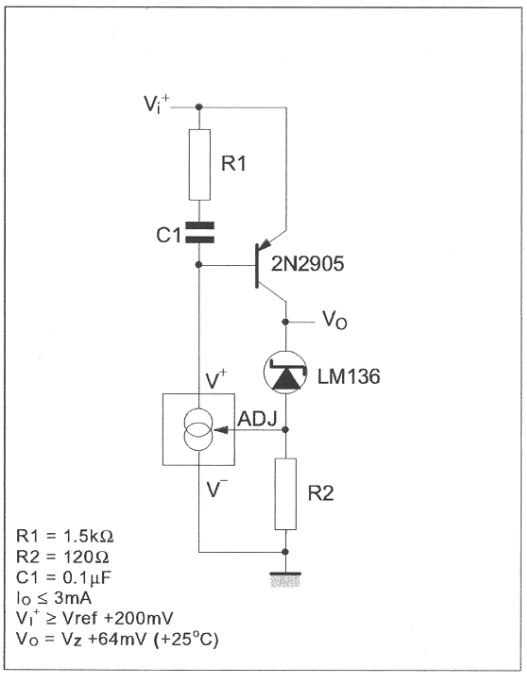

Figure 9 : In-line Current Limiter

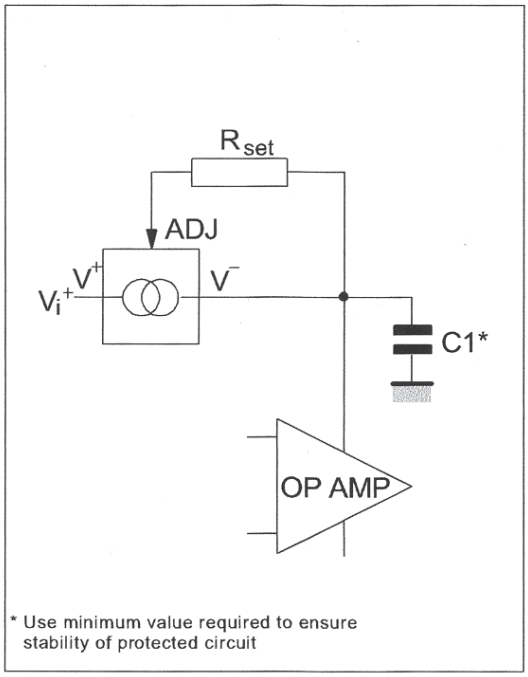

* Use minimum value required to ensure stability of protected circuit

Figure 10 : Fet Cascading for Low Capacitance

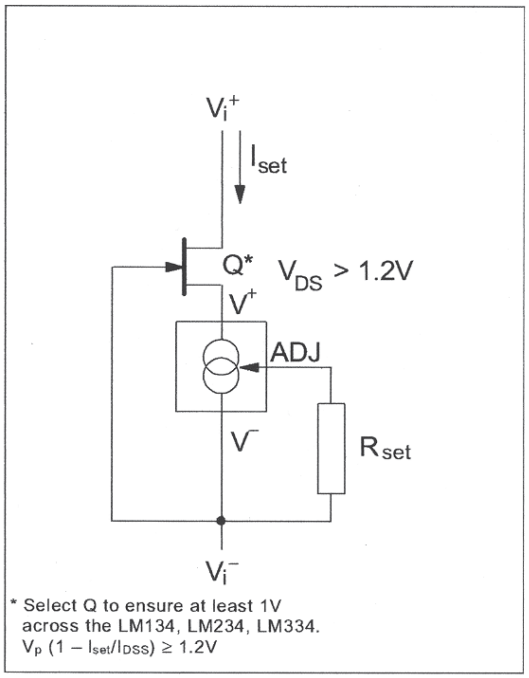

* Select Q to ensure at least 1V across the LM134, LM234, LM334. $V_p\ (1 - I_{set}/I_{DSS}) \geq 1.2V$

PACKAGE MECHANICAL DATA

SO-8 MECHANICAL DATA

DIM.	mm.			inch		
	MIN.	TYP	MAX.	MIN.	TYP.	MAX.
A	1.35		1.75	0.053		0.069
A1	0.10		0.25	0.04		0.010
A2	1.10		1.65	0.043		0.065
B	0.33		0.51	0.013		0.020
C	0.19		0.25	0.007		0.010
D	4.80		5.00	0.189		0.197
E	3.80		4.00	0.150		0.157
e		1.27			0.050	
H	5.80		6.20	0.228		0.244
h	0.25		0.50	0.010		0.020
L	0.40		1.27	0.016		0.050
k	8° (max.)					
ddd			0.1			0.04

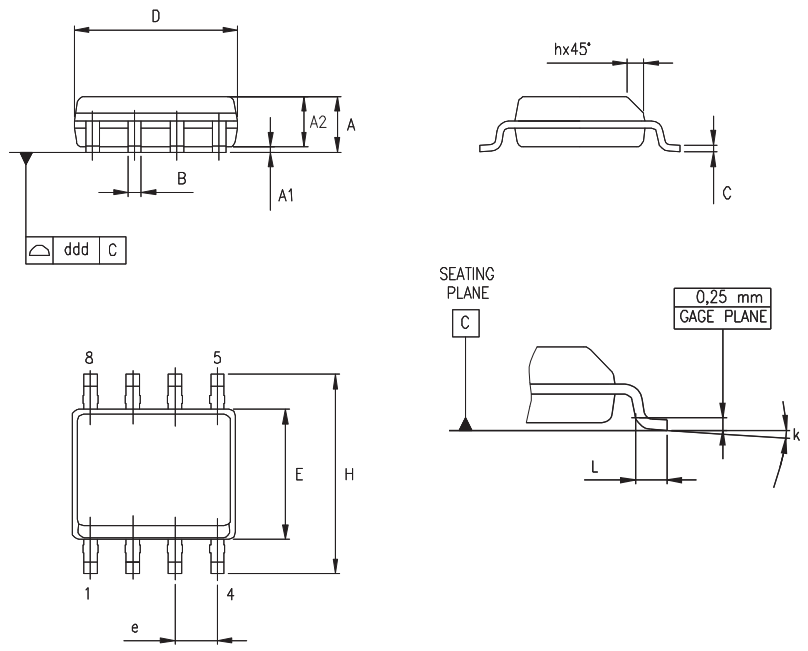

0016023/C

PACKAGE MECHANICAL DATA - TO92 TAPE AMMO PACK & TO92 TAPE & REEL

TO-92 MECHANICAL DATA

DIM.	mm.			inches		
	MIN.	TYP	MAX.	MIN.	TYP.	MAX.
AL			5.0			0.197
A			5.0			0.197
T			4.0			0.157
d		0.45			0.018	
I1	2.5			0.098		
P	11.7	12.7	13.7	0.461	0.500	0.539
PO	12.4	12.7	13	0.488	0.500	0.512
P2	5.95	6.35	6.75	0.234	0.250	0.266
F1/F2	2.4	2.5	2.8	0.094	0.098	0.110
h	-1	0	1	-0.039	0	0.039
P	-1	0	1	-0.039	0	0.039
W	17.5	18.0	19.0	0.689	0.709	0.748
W0	5.7	6	6.3	0.224	0.236	0.248
W1	8.5	9	9.75	0.335	0.354	0.384
W2			0.5			0.020
H			20			0.787
H0	15.5	16	16.5	0.610	0.630	0.650
H1			25			0.984
DO	3.8	4.0	4.2	0.150	0.157	0.165
L1			11			0.433

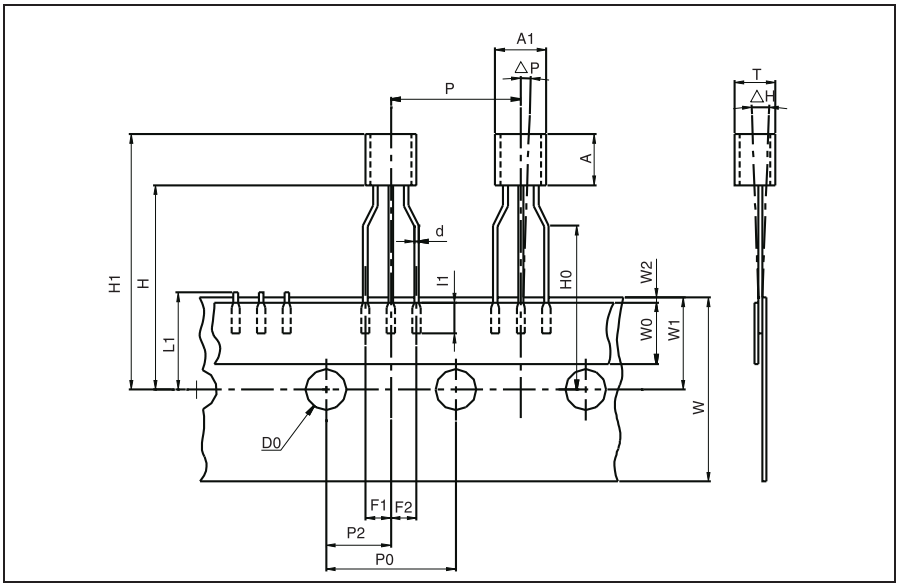

Packing information are available at: http://www.st.com/stonline/prodpres/packages/stdlin.htm

PACKAGE MECHANICAL DATA - TO92 BULK

TO-92 MECHANICA DATA

DIM.	mm.			mils		
	MIN.	TYP	MAX.	MIN.	TYP.	MAX.
A	4.32		4.95	170.1		194.9
b	0.36		0.51	14.2		20.1
D	4.45		4.95	175.2		194.9
E	3.30		3.94	129.9		155.1
e	2.41		2.67	94.9		105.1
e1	1.14		1.40	44.9		55.1
L	12.7		15.49	500.0		609.8
R	2.16		2.41	85.0		94.9
S1	0.92		1.52	36.2		59.8
W	0.41		0.56	16.1		22.0

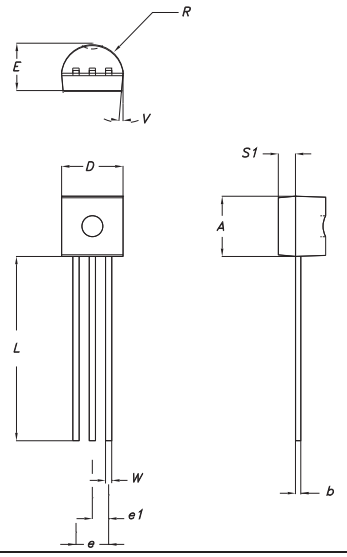

Packing information are available at: http://www.st.com/stonline/prodpres/packages/stdlin.htm

Information furnished is believed to be accurate and reliable. However, STMicroelectronics assumes no responsibility for the consequences of use of such information nor for any infringement of patents or other rights of third parties which may result from its use. No license is granted by implication or otherwise under any patent or patent rights of STMicroelectronics. Specifications mentioned in this publication are subject to change without notice. This publication supersedes and replaces all information previously supplied. STMicroelectronics products are not authorized for use as critical components in life support devices or systems without express written approval of STMicroelectronics.

The ST logo is a registered trademark of STMicroelectronics

© 2003 STMicroelectronics - All Rights Reserved

STMicroelectronics GROUP OF COMPANIES

Australia - Brazil - China - Finland - France - Germany - Hong Kong - India - Italy - Japan - Malaysia - Malta - Morocco

Singapore - Spain - Sweden - Switzerland - United Kingdom

http://www.st.com