LM129/LM329

6.9V Precision Voltage Reference

FEATURES

- *Guaranteed* 10ppm/°C Temperature Coefficient
- *Guaranteed* 1Ω Maximum Dynamic Impedance
- *Guaranteed* 20µV Maximum Wideband Noise
- Wide Operating Current Range 0.6mA to 15mA

APPLICATIONS

- Transducers
- A/D and D/A Converters
- Calibration Standards
- Instrumentation Reference

DESCRIPTION

The LM129 temperature compensated 6.9V zener references provide excellent stability over time and temperature, very low dynamic impedance and a wide operating current range. The device achieves low dynamic impedance by incorporating a high gain shunt regulator around the zener. The excellent noise performance of the device is achieved by using a "buried zener" design which eliminates surface noise phenomenon associated with ordinary zeners. To serve a wide variety of applications, the LM129 is available in several temperature coefficient grades and two package styles. A 20mA positive current source application is shown below.

LT, LTC and LT are registered trademarks of Linear Technology Corporation.

TYPICAL APPLICATION

20mA Positive Current Source

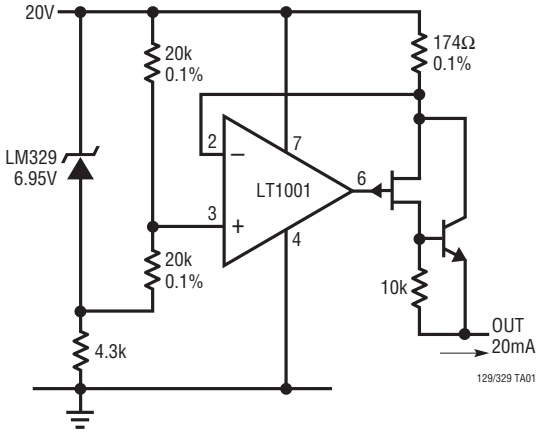

Reverse Voltage Change

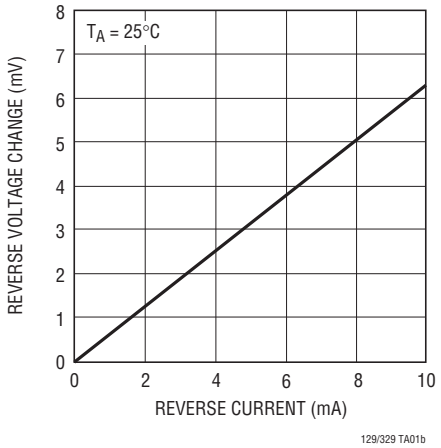

ABSOLUTE MAXIMUM RATINGS (Note 1)

Operating Temperature Range
- LM129 **(OBSOLETE)** ..... –55°C to 125°C
- LM329 ..... 0°C to 70°C

Storage Temperature Range ..... –65°C to 150°C

Lead Temperature (Soldering, 10 sec) ..... 300°C
Reverse Breakdown Current 30mA
Forward Current 2mA

PACKAGE/ORDER INFORMATION

BOTTOM VIEW

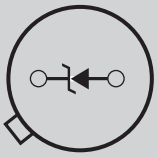

H PACKAGE
2-LEAD TO-46 METAL CAN
T_{JMAX} = 150°C,
θ_{JA} = 440°C/W, θ_{JC} = 80°C/W

ORDER PART NUMBER	
LM129AH	LM329AH
LM129BH	LM329BH
LM129CH	LM329CH
	LM329DH

OBSOLETE PACKAGE
Consider the Z Package for Alternate Source

BOTTOM VIEW

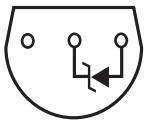

Z PACKAGE
3-LEAD PLASTIC TO-92
T_{JMAX} = 150°C, θ_{JA} = 160°C/W

ORDER PART NUMBER
LM329AZ
LM329BZ
LM329CZ
LM329DZ

Consult LTC Marketing for availability of LM329AZ,LM329CZ and LM329DZ

ELECTRICAL CHARACTERISTICS

The ● denotes the specifications which apply over the full operating temperature range, otherwise specifications are at T_A = 25°C. (Note 2)

SYMBOL	PARAMETER	CONDITIONS		LM129A/ LM129B/LM129C MIN	TYP	MAX	LM329A/LM329B/ LM329C/LM329D MIN	TYP	MAX	UNITS
V_Z	Reverse Breakdown Voltage	T_A = 25°C, 0.6mA ≤ I_R ≤ 15mA		6.7	6.9	7.2	6.6	6.9	7.25	V
$\frac{\Delta V_Z}{\Delta I_R}$	Reverse Breakdown Voltage Change with Current	T_A = 25°C, 0.6mA ≤ I_R ≤ 15mA			9	14		9	20	mV
		1mA ≤ I_R ≤ 15mA	●		12			12		mV
$\frac{\Delta V_Z}{\Delta Temp}$	Temperature Coefficient	I_R = 1mA,								
		LM129A/LM329A	●		6	10		6	10	ppm/°C
		LM129A/LM329B	●		15	20		15	20	ppm/°C
		LM129A/LM329C	●		30	50		30	50	ppm/°C
		LM329D	●					50	100	ppm/°C
	Change in Temperature Coefficient	1mA ≤ I_R ≤ 15mA	●		1			1		ppm/°C
r_Z	Dynamic Impedance	T_A =25°C, I_R = 1mA			0.6	1		0.8	2	Ω
		1mA ≤ I_R ≤ 15mA	●		0.8			1		Ω
e_n	RMS Noise	T_A =25°C, 10Hz ≤ f ≤ 10kHz			7	20		7	100	μV
$\frac{\Delta V_Z}{\Delta Time}$	Long Term Stability	T_A = 45°C ±0.1°C, I_R = 1mA ±0.3%			20			20		ppm/kHr

Note 1: Absolute Maximum Ratings are those values beyond which the life of a device may be impaired.

Note 2: To determine the junction temperature as a function of the ambient temperature, see θ_{JA} for each package.

TYPICAL PERFORMANCE CHARACTERISTICS

Reverse Characteristics

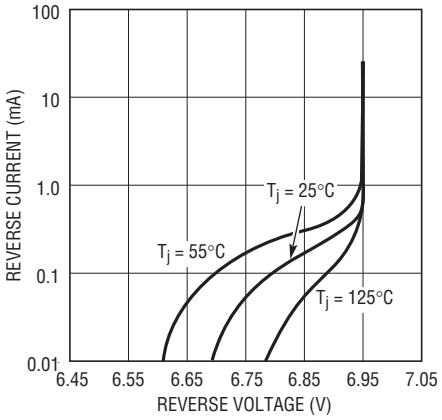

Dynamic Impedance

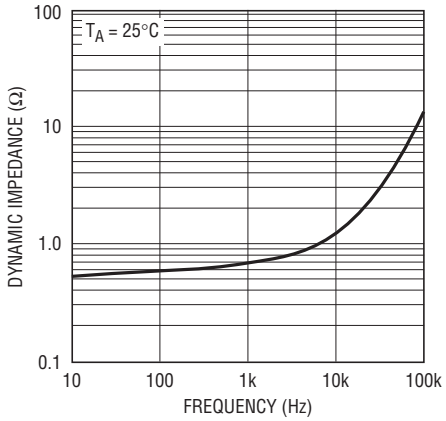

Response Time

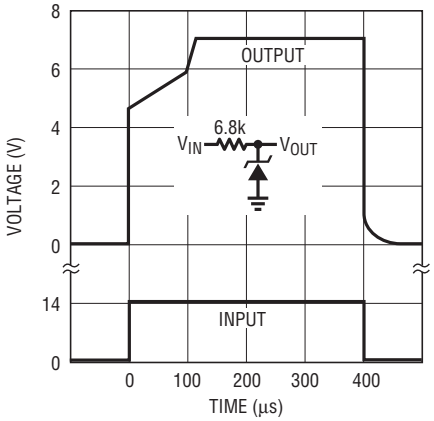

Forward Characteristics

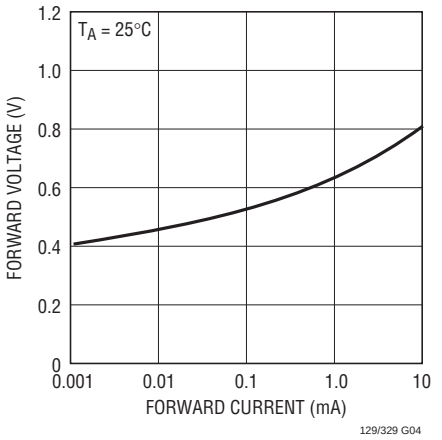

Noise Voltage

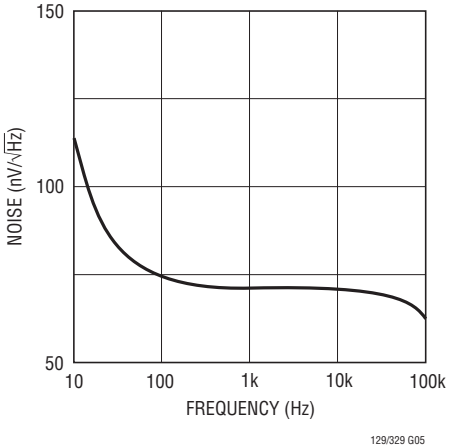

Low Frequency Noise Voltage

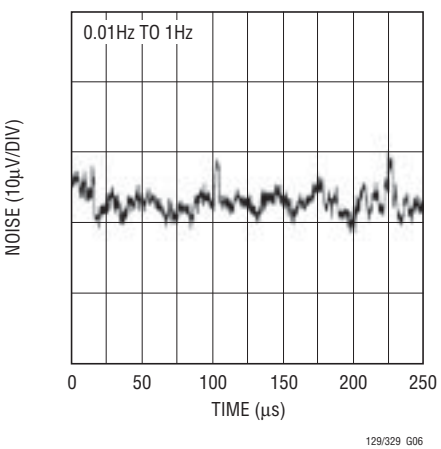

SCHEMATIC DIAGRAM

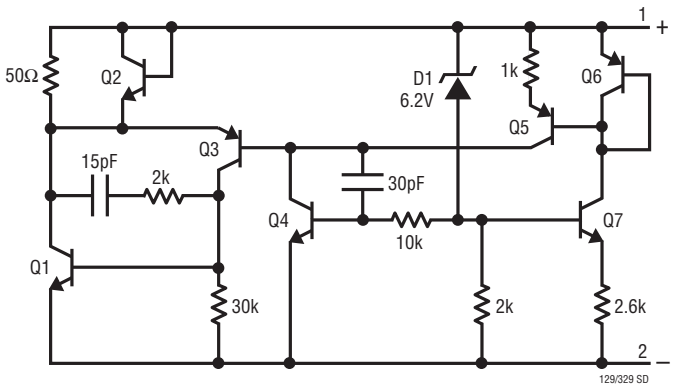

Information furnished by Linear Technology Corporation is believed to be accurate and reliable. However, no responsibility is assumed for its use. Linear Technology Corporation makes no representation that the interconnection of its circuits as described herein will not infringe on existing patent rights.

TYPICAL APPLICATIONS

Common Reference

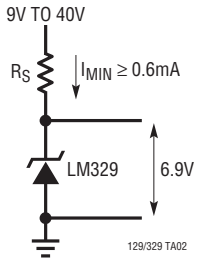

Buffered Reference Using a Single Supply

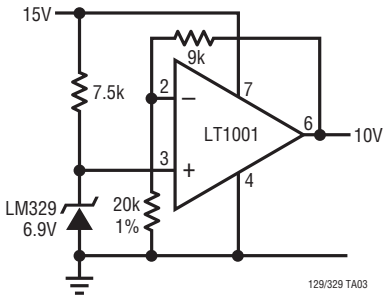

PACKAGE DESCRIPTION

H Package
2-Lead and 3-Lead TO-46 Metal Can
(Reference LTC DWG # 05-08-1340)

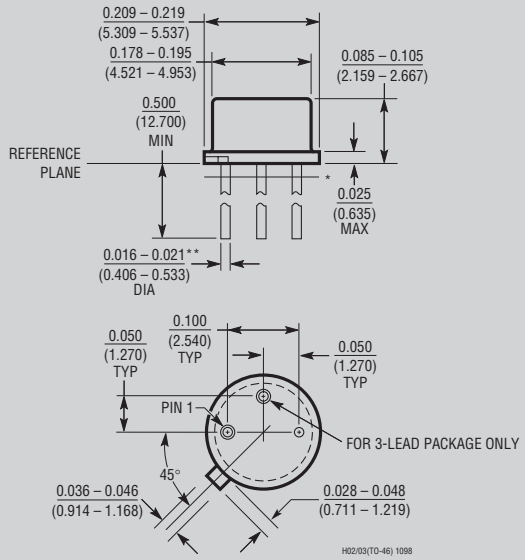

*LEAD DIAMETER IS UNCONTROLLED BETWEEN THE REFERENCE PLANE AND 0.045" BELOW THE REFERENCE PLANE

**FOR SOLDER DIP LEAD FINISH, LEAD DIAMETER IS 0.016 – 0.024 (0.406 – 0.610)

OBSOLETE PACKAGE

Z Package
3-Lead Plastic TO-92 (Similar to TO-226)
(Reference LTC DWG # 05-08-1410)

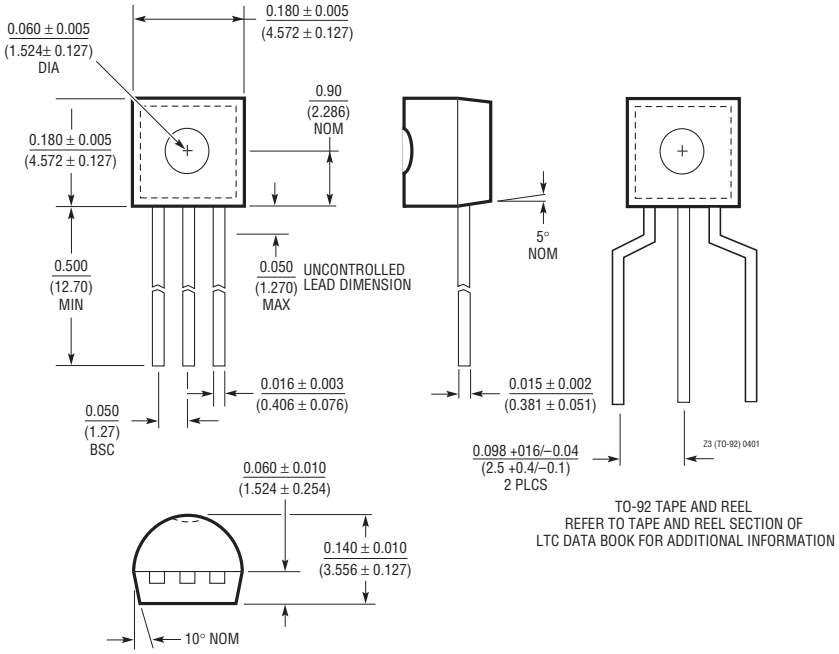

TO-92 TAPE AND REEL
REFER TO TAPE AND REEL SECTION OF
LTC DATA BOOK FOR ADDITIONAL INFORMATION

RELATED PARTS

PART NUMBER	DESCRIPTION	COMMENTS
LT1460	Micropower, Precise Series Reference	10ppm/°C, Output Voltages: 2.5V, 3V, 3.3V, 5V, 10V
LT1634	0.05% Accurate, 10ppm/°C, Shunt Reference	Output Voltages: 1.25V, 2.5V, 4.096V, 5V

Linear Technology Corporation
1630 McCarthy Blvd., Milpitas, CA 95035-7417
(408) 432-1900 • FAX: (408) 434-0507 • www.linear.com
129329fa LT/CP 0901 1.5K REV A • PRINTED IN USA
© LINEAR TECHNOLOGY CORPORATION 1985